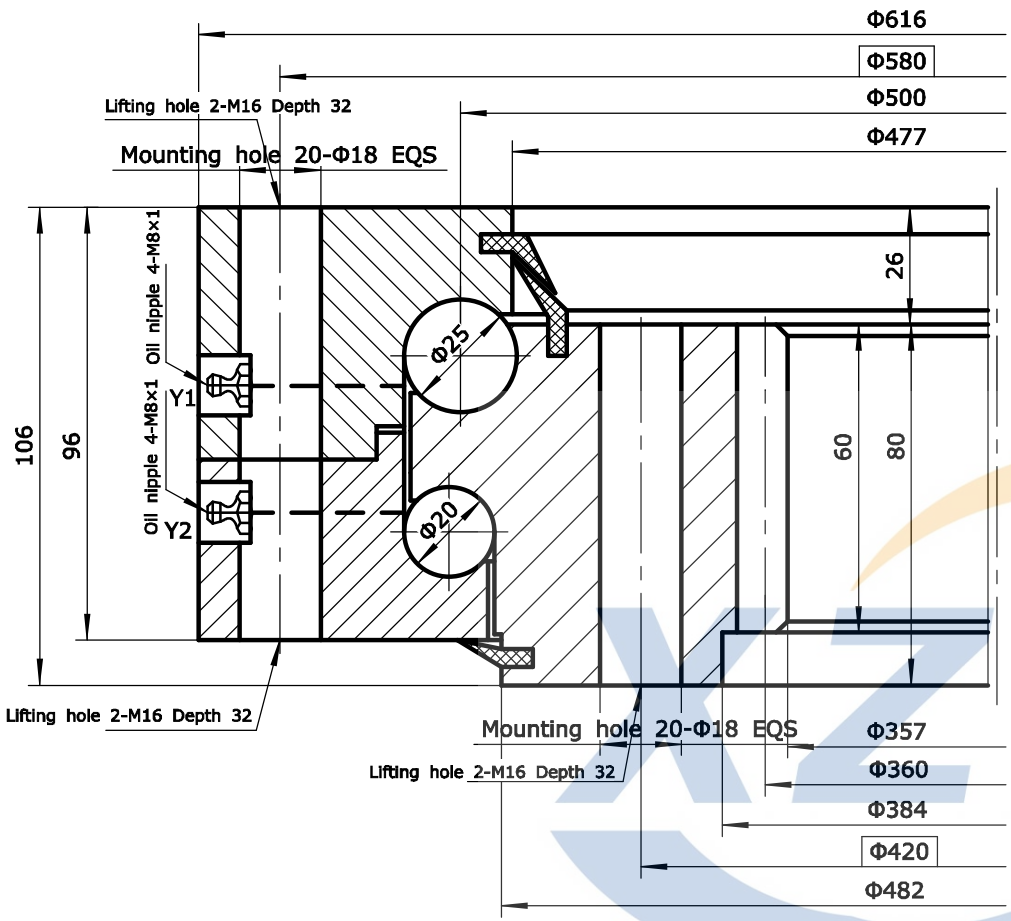

6.3
U.O.N

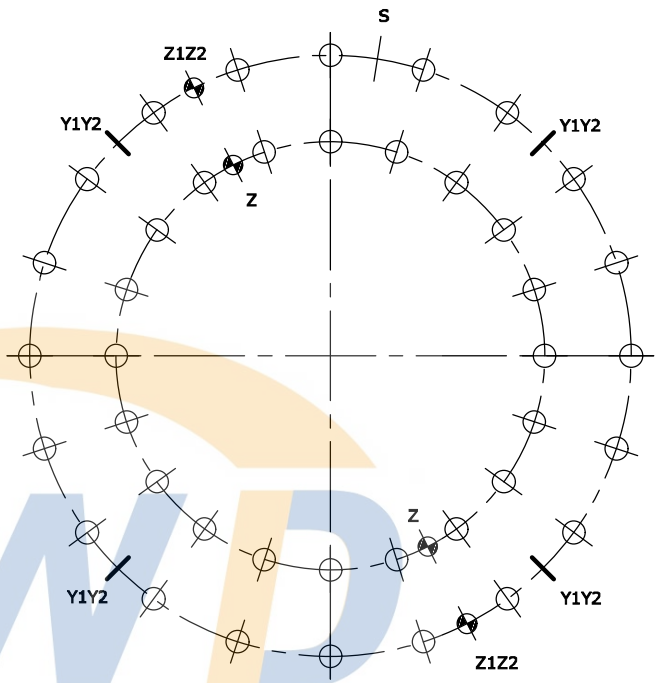

Notes:
1.Raceway of inner &outer ring induction hardened. hardness: 55~62HRC Depth≥3.0mm
2.Inner & outer ring quenched & tempered, hardness: 207~262HB

Gear Data				
Module	m	5	Gear heat treatment requirements	
Teeth no	z	72	_____ HRC	
Teeth pressure angle	α	20°	Precision(GB10095-88)	10
Modification coefficients	x	+0.5		
Reduction coefficients	km	1.0		
Pitch diameter	d	360		

Design		Check	
Date		Approve	

	Qty	Size	Axial clearance	0.10~0.20
Inner ring mounting hole	20	Φ18	Radial clearance	0.10~0.70
Outer ring mounting hole	20	Φ18		
Oil hole	2×4	M8×1		

T:Pulg location S:Soft zone Y:Oil hole Z:Lifting hole

machine tolerances without notes			
≤200	≤500	≤710	≤1120
±0.30	±0.40	±0.50	±0.65
≤1600	≤2000	≤2500	≤3150
±0.80	±0.95	±1.10	±1.35
≤4000	≤5000		
±1.65	±2.0		

Technical processing standards without notes according to ...JB/T2300-2011

Model	023.25.500		Weight	100kg
Name	Slewing Bearing	Qty	Scale	
Material	50Mn	Total 1 page	The 1st page	

XUZHOU WANDA SLEWING BEARING CO.,LTD
Fax: +86 516 83309366 Fax: +86 516 83915766
http://www.slew-bearing.com