Group Telephone Exchange System

TP256/240 system

User Manual



Contents

Chapter 1 Product Introduction 8
1.1 Summary 8
1.2 Main features 8
1.3 Technical parameter 11
Chapter 2 System Structure and Installation Instruction 12
2.1 Outside view 12
2.2 Instruction for card and interface 13
2.3 Attention before installation 15
2.4 Installation steps(for initial installation) 16
Chapter 3 Glossary Interpretation and Default Setting 22
3.1 Glossary interpretation 22
3.2 System initial parameter value(default setting) 22
Chapter 4 Quick Setting & Operation Instruction 24
4.1 Quick setting(Initial setting method) 24
4.1.1 Enter system programming status 24
4.1.2 Enable trunk line 24
4.1.3 Manual working mode for trunk line incoming call(operator mode) 24
4.1.4 Auto-attendant working mode for trunk line incoming call(OGM mode) 24
4.1.5 Ext.port number inquiry and Ext number coding 25
4.1.5.1 Ext number flexible coding 25
4.2 Quick operation instruction 26
4.2.1 Dial extension 26
4.2.2 Dial operator 26
4.2.3 Trunk line outgoing call operation 26
4.2.5 Call transfer operation 26
4.2.6 Call pickup 27
4.2.7 Call forward to another trunk line 27
4.2.8 Trunk line reservation operation 27
Chapter 5 System Programming & Setting Mode 28
5.1 Programming setting notes 28
5.1.1 Batch setting instruction 28
5.1.2Glossary 29
5.2 Setting notes: 29
5.3 Enter/Exit system programming status 29
5.3.1 Enter programming status(for first time) 29
5.3.2 Exit programming status 30
5.3.3 Change programming password 30
5.3.4 Enter programming status(with new password) 30
5.4 Restore default setting 30
5.5 System soft reset 30
5.6 System time setting 30
5.6.1 Set by programming 30
5.6.2 Set by operator 31
5.7 Inquiry function 31
5.7.1 Instruction 31
5.7.2 Volume setting for voice report 31
5.7.3 Version number inquiry 31
5.7.4 System time inquiry 31

5.7.5 Extension work status inquiry....31
5.8 Music on hold....32
5.8.1 Monitor the on hold music in programming status....32
5.8.2 Monitor the on hold music by any extension....32
5.9 Enable/Disable trunk line....32
5.10 Ext number/Ext Group number and members....32
5.10.1 Ext number flexible coding....32
5.10.1.1Single setting Ext number....32
5.10.1.2 Batch setting Ext number....33
5.10.1.3 Batch setting all Ext number....33
5.10.1.4 Restore all Ext number to default setting....33
5.10.1.5 Ext number inquiry....33
5.10.1.6 Ext port number and Ext number inquiry....33
5.10.2 Ext group number & members....33
5.10.2.1 Ext group instruction....33
5.10.2.2 Single setting Ext group number....33
5.10.2.3 Batch setting Ext group number....34
5.10.2.4 Batch setting number in all Ext group....34
5.10.2.5 Restore Ext group number to default setting....34
5.10.2.6 Ext group member setting....34
5.10.2.7 Clear Ext group members....34
5.11 Ext dial out mode....34
5.12 Operator function....35
5.12.1 Set operator....35
5.12.2 Enable/Disable fast dial operator....35
5.12.3 Fast dial operator setting....35
5.13 Day/Night work mode....35
5.13.1 Day/Night switch mode....35
5.13.2 Set Day/Night mode switching date & time....36
5.13.3 Day/Night work mode in manual....36
5.14 Intercom call....37
5.14.1 Ringing time for intercom call....37
5.14.2 Intercom call priority....37
5.14.3 Ext group call mode....37
5.14.4 Intercom call operation method....37
5.14.4.1Dial operator....37
5.14.4.2 Dial Ext....37
5.14.4.3 Dial Ext group....37
5.14.4.4 Internal line booking....38
5.15 Outgoing call....38
5.15.1 Outgoing call code setting....38
5.15.2 Outgoing call traffic mode....38
5.15.3 Trunk group....38
5.15.4 Ext access trunk....39
5.15.4.1 Ext access trunk in day mode....39
5.15.4.2 Ext access trunk in night mode....39
5.15.5 Outgoing call level setting....39
5.15.5.1 Instruction for outgoing call level....39
5.15.5.2 Setting restriction prefix item A-D....40
5.15.5.3 Special prefix setting....40
5.15.5.4 Clear special prefix....40

5.15.5.5 Special number access setting for level 2-8..... 40
5.15.5.6 Outgoing call level setting..... 40
5.15.5.6.1 Outgoing call level setting in day mode..... 40
5.15.5.6.2 Outgoing call level setting in night mode..... 41
5.15.5.7 Case..... 41
5.15.6 Outgoing call duration control setting..... 41
5.15.7 Outgoing call operation method..... 42
5.15.7.1 Outgoing call dialing directly..... 42
5.15.7.2 Outgoing call by dialing outgoing code firstly..... 42
5.15.7.3 Outgoing call by selecting certain trunk..... 42
5.15.7.4 Outgoing call by booking trunk line..... 42
5.16 Incoming call..... 42
5.16.1 Set work mode..... 42
5.16.1.1 Set operator work mode..... 42
5.16.1.2 Set auto-attendant work mode..... 43
5.16.1.3 Set system CRBT mode..... 43
5.16.1.4 Set call center mode..... 43
5.16.2 Incoming call delayed ring setting..... 43
5.16.3 Relevant setting for operator work mode..... 43
5.16.3.1 Operator ringing Ext setting in day mode..... 43
5.16.3.2 Operator ringing Ext setting in night mode..... 44
5.16.3.3 Ringing mode setting in operator work mode..... 44
5.16.3.4 Ring round robin switching time setting..... 44
5.16.3.5Ringing extension busy process in operator mode..... 44
5.16.4 Call center mode setting..... 44
5.16.5 Auto-attendant setting..... 45
5.16.5.1Enable/Disable auto-attendant..... 45
5.16.5.2 Auto-attendant setting in day/night mode..... 45
5.16.5.3 Auto-attendant corresponding to operator..... 45
5.16.5.4 The access of trunk use auto-attendant..... 45
5.16.5.5 OGM message section setting..... 46
5.16.5.6 OGM recordable time setting..... 46
5.16.5.7 OGM recording..... 46
5.16.5.8 Monitor the recorded OGM..... 47
5.16.6 Auto-attendant work mode setting..... 47
5.16.6.1Auto-attendant busy process..... 47
5.16.6.2 No dial process..... 47
5.16.6.3 Incorrect dialing process..... 48
5.16.6.4 Dialed Ext busy process..... 48
5.16.6.5 Ringing time setting..... 48
5.16.6.6 Dialed extension no one answering process..... 48
5.16.7 System CRBT relevant setting..... 49
5.16.7.1 CRBT processing mode..... 49
5.16.7.2 CRBT ringing mode..... 49
5.17 Speed dialing..... 49
5.17.1 Enable/Disable speed dialing..... 49
5.17.2 Set the initial code for Ext/Ext group..... 50
5.17.3 Set speed dialing number..... 50
5.17.4 Clear speed dialing number..... 50
5.18 Call pickup..... 50
5.18.1 Call pickup level instruction..... 50

5.18.2 Call pickup level setting....50
5.18.3 Call pickup operation....50
5.18.3.1 Call pickup for internal ringing Ext....50
5.18.3.2 Call pickup for general....51
5.19 Call transfer....51
5.19.1 Call transfer parameter setting....51
5.19.1.1 Flash time setting....51
5.19.1.2 Set outgoing call transfer delayed time....51
5.19.1.3 Set ringing time for call transfer....51
5.19.1.4 No answer process for call transfer....51
5.19.1.5 Intercom call transfer....51
5.19.1.6 No dial delayed time setting for call transfer....51
5.19.1.7Incorrect dialing process for call transfer....52
5.19.1.8 Retrieve priority after call transfer....52
5.19.1.9 Enable/Disable call transfer....52
5.19.2 Call transfer operation....52
5.19.2.1 Call transfer for external/intercom call....52
5.19.2.2 Outgoing call transfer(boss/secretary function)....52
5.20 Call forward....52
5.20.1 Call forward parameter setting....52
5.20.1.1 Call forward(no answer) time setting....52
5.20.1.2Call forward setting memory protect while power off....53
5.20.1.3 Trunk group for call forward to trunk line....53
5.20.1.4 Maximum times for call forward....53
5.20.1.5 Set call forward to trunk line by Ext....53
5.20.2 Call forward(always/busy/no answer)setting by operator....53
5.20.2.1 Clear the call forward setting for all extension....53
5.20.2.2 Clear the call forward setting for certain extension....53
5.20.2.3 Set certain Ext call forward(always) to certain Ext....53
5.20.2.4 Set certain Ext call forward(always) to trunk line....53
5.20.2.5 Set certain Ext call forward(busy/no answer)to certain extension....54
5.20.2.6 Set certain Ext call forward(busy/no answer) to trunk line....54
5.20.2.7 Set call time for call forward to Trunk line....54
5.20.3 Call forward(always/busy/no answer)setting by extension....54
5.20.3.1 Clear call forward setting for extension....54
5.20.3.2 Set call forward(always) to another Ext....54
5.20.3.3 Set call forward(always) to trunk line(CO line transfer to CO line)....54
5.20.3.4 Set call forward(busy/no answer) to internal Ext....54
5.20.3.5 Set call forward(busy/no answer)to trunk line(Trunk line transfer to Trunk line)....55
5.21 Trunk line reservation....55
5.21.1 Reservation time setting....55
5.21.2 How to reserve trunk line....55
5.21.3 Restore the reserved trunk line....55
5.21.4 Call pickup during reservation....55
5.22 Conference call....55
5.22.1 Three way conference....55
5.22.2 Three way conference (1 Trunk line and 2 Extensions)....55
5.22.3 Three way conference (2 Trunk lines and 1 Extension)....55
5.22.4 Multi-way conference....56
5.22.5 Conference time Setting....56

5.23 Call barge-in/Force disconnect..... 56
5.24 Call all extension(emergency call).....56
5.25 Common Ext operation.....56
5.25.1 DND(Do Not Disturb).....56
5.25.2 Clear extension function setting..... 56
5.25.3 Call switch.....57
5.25.4 Flash time setting..... 57
5.26 Internal hotline function..... 57
5.26.1 Enable/Disable extension hot line function.....57
5.26.2 Hotline waiting time setting.....57
5.27 Special prefix setting (compulsory for IP prefix dialing and LCR).....57
5.28 LCR(Least Cost Routing) function.....58
5.28.1 Trunk group setting..... 58
5.28.2 LCR parameter setting..... 58
5.28.3 Call restriction (only for LCR function).....58
5.28.4 Access code setting for special trunk line group (only for auto LCR). 59
5.29 IP prefix dialing setting.....59
5.29.1 IP prefix setting.....59
5.29.2 Enable/Disable IP prefix dialing.....59
5.29.3 IP IP prefix dialing rule setting.....59
5.30 Memory dialing.....60
5.30.1 Memory number setting..... 60
5.30.2 Enable/Disable memory dialing..... 60
5.30.3 How to use memory dialing..... 60
5.31 Private password..... 60
5.31.1 Setting private password.....60
5.31.2 How to use private password.....61
5.32 Extension dynamic lock.....61
5.32.1 Enable/Disable extension dynamic lock.....61
5.32.2 Set extension dynamic lock.....61
5.32.3 Clear dynamic lock by operator..... 61
5.32.4 Change dynamic lock by extension..... 61
5.32.5 How to use dynamic lock..... 61
5.33 Alarm clock.....62
5.33.1 Alarm clock message setting.....62
5.33.2 Set alarm clock by operator.....62
5.33.3 Clear alarm by operator..... 62
5.33.4 Set alarm clock by extension..... 62
5.34 Paging function..... 62
5.34.1 Page directly..... 62
5.34.2 Trunk line incoming call transfer to page..... 62
5.35 Fax detect..... 63
5.35.1 Fax detect setting.....63
5.36 CLI(Caller ID).....63
5.36.1 Caller ID received mode..... 63
5.36.2 Add prefix number for intercom Caller ID.....63
5.36.3 Enable / Disable Intercom Caller ID.....63
5.37 Intercom function (Doorphone management).....64
5.37.1 Intercom function Setting..... 64
5.37.2 Setting intercom extension..... 64
5.37.3 Setting door phone.....64

5.37.4 Setting intercom extension / Ringing extension for door phone..... 64
5.37.5 How to use intercom and door phone.....65
5.37.6 How to use door lock..... 65
5.37.7 Unlock directly.....65
5.37.8 Door lock control special operation.....65
5.38 PC Management billing function..... 65
5.38.1 System parameter.....65
5.38.2 Charging method setting.....65
5.39 Setting Office Code/Functional Code.....66
5.39.1 Setting Office Code to * , Functional Code to #.....66
5.39.2 Setting Office Code to # , Functional Code to *.....66

Chapter 1 Product Introduction

Welcome to choose this group telephone exchange system, please read this manual carefully before use. Should you have any query during installation or operation, please feel free to contact us.

1.1 Summary

This system is a latest telephone exchange developed by our company who has accumulated in the filed of telecommunication many years.On design, it was adopted for professional communication control theory. On quality, it was adopted for industrial electronic components. On production, it was adopted for standard of ISO9000. It has the characteristic like excellent call quality, reliable stability, strong expansibility, convenient maintenance, good compatibility etc.

This system support PC call billing software and simple hotel management facility. User can easily set and operate the system. The system provide the features like status monitor and call bill record, inquiry, statistic, management, print-out, deposit, alarm clock wake up etc.

On structure, this system was adopted for module steel casing, rack mountable. Each extension card has 16 ports, each trunk card has 8 port. The maximum capacity is 24 CO line, 255 extension(for TP256) or 8 CO, 240 extension(for TP240). Moreover the system can be without trunk card as well, to work as a pure intercom system.

This system was adopted for universal RJ45 network interface, easy & convenient for installation.

This system can be widely applicable in institution, hotel, school, army, mine, hospital, apartment, building etc..

1.2 Main features

- Trunk/Ext status LED display: on each trunk card, there are working and ringing LED status lamp, on each extension card, there are off hook and working LED status lamp, easy for installation and overhaul.
- BIT Fault tolerant function: this system is with powerful BIT fault tolerant function, can self-test the fault of components, and self-shield defective module
- Non-blocking communication: this system is with 32 communication path. Each trunk card, extension card, main board is with multiple signal receiving device,number sender device. And the system is adopted for distributed control structure, signal tone not occupy any path.
- Extension number report by voice: this system can be checked extension number in voice or by caller ID. And it can be also checked version number, system time.
- Intercom and transferred caller ID: this system is adopted for the latest caller ID control technology. Intercom caller ID is available, and external line caller ID can be received accurately, compatible for FSK/DTMF dual mode.
- Fax detect: when system is in auto attendant work mode, it can auto detect whether the incoming call is fax signal, and transfer the signal to corresponding fax

extension.

- External music interface: user can freely choose whether use external music source as on hold/transfer music
- Paging interface: by using this interface, user can choose external broadcasting system to search people. Or in optional configuration, this interface can be also recorded OGM message from PC.
- Flexible programming mode: this system can be programmed by either programming extension or PC management software.
- Operator function: operator has the priority as call hold, call pickup,call transfer, call forward, boss/secretary. This system can be setting four operators. And operator can program the system, can make call barge in etc.
- Extension number flexible coding:this system can be setting 2 to 6 digits unequal extension numbers.
- Trunk/Ext Group: this system can be setting up to 32 trunks/extension groups.
- Day/night work mode: this system is built in real time clock, can auto switch to the outgoing call class in day and night, incoming intercom call, outgoing Trunk line priority. And it is with lunch time and weekend mode setting.
- Incoming call multiple working mode: including ring simultaneously in operator mode, round robin ring in operator mode, ring queue in operator, system CRBT, call center(average traffic), auto-attendant work mode. And different work mode can be switched flexibly, i.e. When auto attendant is busy system can be switched into other operator work mode.
- Multiple dial out mode: Except for direct dial out/indirect dial out mode, system can be setting different mode like “select certain trunk line, booking certain trunk line, least cost routing, auto call forward” to dial external number. Redial feature is available in any mode.
- Multiple extension number dial mode: except direct dial extension number, system can be setting other mode like dial 0 for operator, extension(or Ext. Group) number fast dialing etc.
- Auto attendant(DISA): this system is configured up to 4 channel OGM, and the voice message can be set in 6 section.The message duration can be setting as per needs.
- Speed dialing: speed dialing is available for intercom call and Ext.dialing in auto attendant mode. That means dialing only one digit to reach the corresponding extension.
- Call transfer: both external call and intercom call can be transferred to either extension or ext group.
- Call forward: when extension is busy or no answer, can set the incoming call to be forwarded to other extension or another Trunk line.
- Call pickup: any extension can pickup the call from other ringing extension.
- Call restriction: this system can be set the class assignment for all extension, call duration restriction, restrict certain extension accessing trunk line, restrict extension call pickup, restrict extension to dial certain intercom line. And can be also set Do Not Disturb(DND), dynamic locking etc.
- Ring Identify: different ringing pattern for intercom call, Trunk line incoming call and door phone incoming call

- Three party conference, call conference, auto CO to CO transfer: the call among of two extension and one Trunk line, or two Trunk line and one extension is available.
- Multi-party conference: system is available for call conference between 16 trunk lines and multiple internal extension.
- Call switch: during the call with trunk line, if there is another trunk line or door phone or other extension call arriving, system can hold the call,and pickup another call.
- Memory dialing: System can store 96 groups Trunk line number. And each Trunk line can be setting an abbreviated short code, user can dial this code instead of full number.
- Private password: system can be set up to 128 password account. Corresponding to different level, user can dial external number at any extension by using private password.
- Internal hotline: any extension can be setting dial operator directly once off hook
- Alarm clock voice prompt: alarm clock can be setting by extension, operator or PC software. Meanwhile, the fifth paragraph OGM message can be setting as alarm clock prompt message.
- Intercom call/Door phone function: All extension can be setting as intercom call mode. Extension is off hook, to call designated ringing extension, and the calling extension can be setting music on hold or ring back tone. When extension is setting as door phone,door lock opener is available by code.
- Door lock opener/Remote controller: this system can be setting 4 door lock opener interface, and this interface can be also work as bell or other controller(remote controller, remote lock-opener).
- Least Cost Routing(LCR): system can be setting flexibly access certain Trunk line at least cost routing, different number to access different operator trunk line, to save telephone rate. System can be setting 4 group special trunk and 1 common trunk.
- IP prefix dialing: system can be setting 4 groups different long distance IP number, to corresponding to different trunk numbers(work in with LCR)
- PC OGM download: user can download the recorded voice message to system, to work as OGM.
- Multiple call billing mode: system has the function as incoming call billing, outgoing call billing, can set delayed billing or reverse polarity billing.
- PC management software: it can display the working status for each extension and each Trunk line,including incoming and outgoing call.SMDR(Station Message Detail Recording),Phone book are available
- Call billing interface:system can be setting different rate to make call billing and print out the call bill. When PC is power off, system can store 3000 billing data.
- Hotel Management: this system has simple hotel management function, like wake up, deposit, and call bill can be forwarding to professional hotel management software through 232 communication, network, text etc..
- Memory protect while power off: when power off, system can store all previous setting, no need to reset when power on.
- Remote maintenance: system support remote programming, detect and maintenance. Convenient for installation, debugging.

- Strong lightning protection: all Trunk line and extension port is with perfect lightning protection circuit, with grounding interface.
- High efficient and stable switch power board: this system is used with new design high efficient and stable switch power board with 24V backup battery interface, power up to 100W,（110-220）V±10% 50/60Hz self-adaptable, suitable for different voltage range, with protection facility when electric supply working, system can auto-charge, when power off, the power board can continue to supply power to system.

1.3 Technical parameter

- Environment……Temperature －10℃～4 0℃; Humidity＜ 8 0 %
- Power Supply Voltage……AC110-220V±10%
- Power Dissipation ……≤100W
- Exchange format:…… analog switch matrix
- Telephone type……Dual Tone Multi-frequency
- Call ID receiving format……FSK/DTMF
- Caller ID sending format……DTMF
- Communication path……32
- Telephone feed……DC40V 25mA±15%
- Distortion……≤10%
- Ringing current……AC70V±10% 50HZ
- Tone of Trunk line……Tone source from provider
- Dial tone of internal line……450HZ sequential square wave
- Ring back tone of internal line…450HZ sequential square wave 1s on, 4s off
- Busy tone of internal line…450HZ sequential square wave 0.3s on, 0.3s off
- Acknowledge tone of internal line…450HZ sequential square wave 1s on
- Prompt tone of Trunk line……450HZ sequential square wave 2s on, 5s off
- External music interface……input voltage range 0.5V-2.0V
- External paging interface……output voltage maximum 2.0V
- Backup battery interface voltage……24V,3A
- Size of the case……42.5cm*35cm*17.5cm
- Packing size……52.5 cm *44 cm *26 cm

Chapter 2 System Structure and Installation Instruction

The interface of this system have two parts: extension part & trunk part. For extension card, 16 line each card. For trunk card, 8 line each card.
System full capacity: For TP256, 32 CO line, 240 extension or 24 CO line, 255 extns,
For TP240, 8 CO line, 240 extension or 16 CO line, 208 extension
system adopt for modularity design, user can configure different capacity as per needs.

System can connect external device

- Regular analog single line telephone(SLT), cordless phone, fax machine, computer, modem, telephone transmitter
- System can be configured up to 8 key phone(**optional**)

2.1 Outside view

Front view(sketch 2-1)

Front view for TP256 and TP240

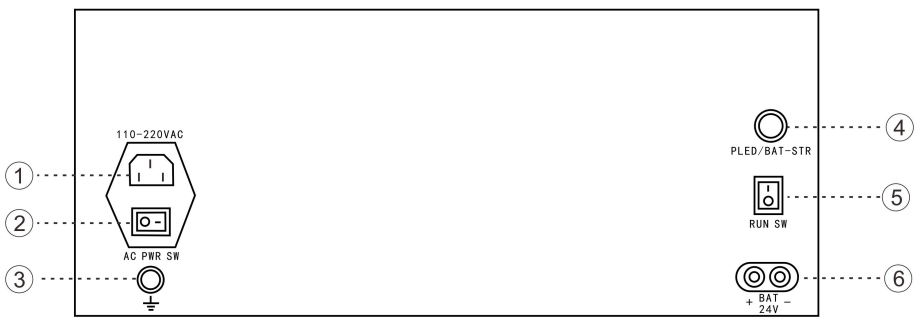

Sketch 2- 1

①110-220VAC Power Input Interface ②AC Power Switch ③Grounding Interface
④Battery Start Button ⑤System Start Switch ⑥24V Battery Connector

☞ Please press “PLED/BAT-STR”at the first time for battery installation

Back View (sketch 2-2)

Back view for TP256

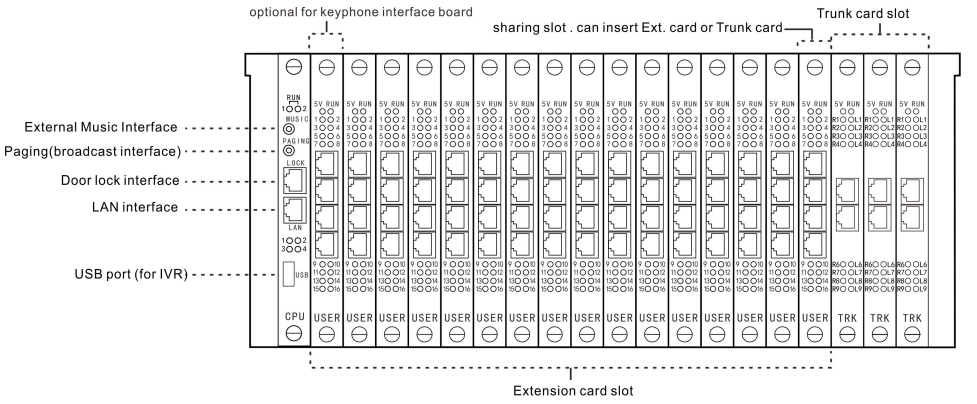

Sketch 2- 2

Back view for TP240

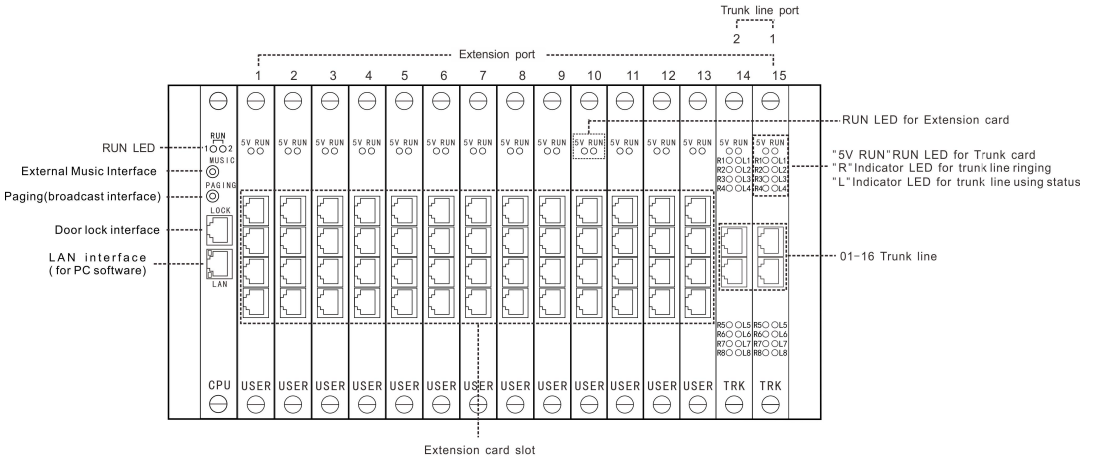

2.2 Instruction for card and interface

① CPU mainboard (model number PBX32256-CPU)

In the leftmost of mainframe, it is the central control unit, coordinate extension card and trunk card to work, switching center, store working parameter etc..In internal, it produce different signal sound source and voice circuit, then DTMF transponder transmit the received sound signal. In external,it work compatible with PC and other system.

Indicator status: power-on self-test(POST), the twin indicator alternating flashing. Normal working status is 1s on, 1s off.

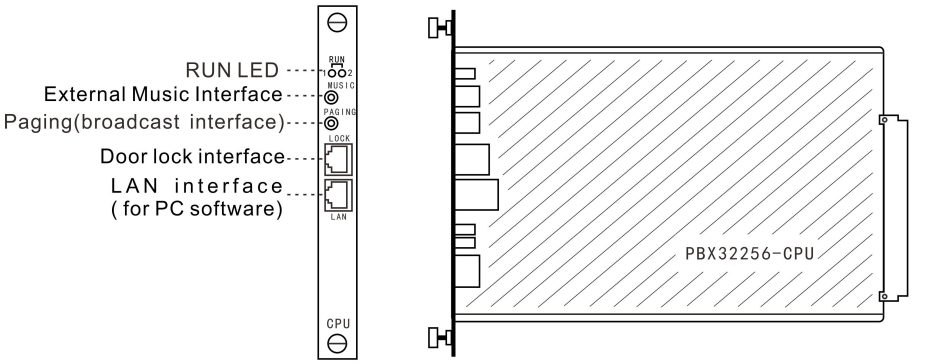

Sketch 2- 4

② 8 port trunk card(model number PBX32256-008TRU)

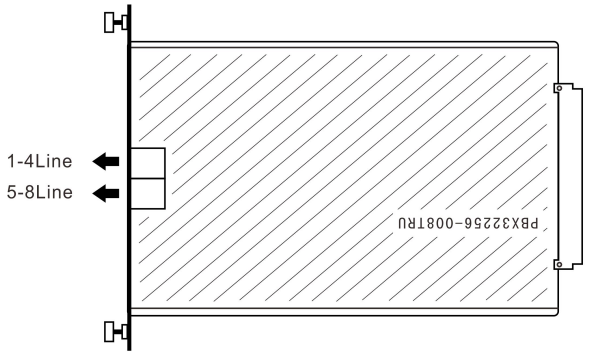

Sketch 2- 5

Each trunk card has 2 bidirectional trunk interface, the interface sketch as below

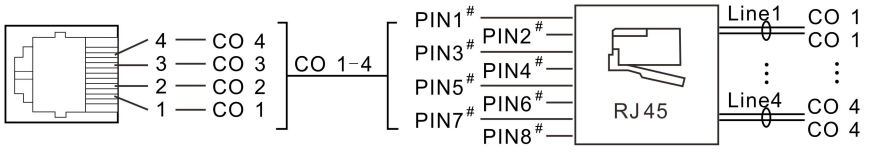

Sketch 2- 6

③ 16 port extension card(model number PBX32256-016EXT)

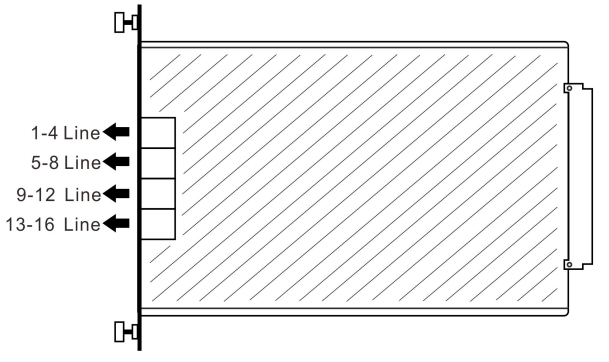

Sketch2- 7

Each extension card has 4 internal extension interface, and each interface can be configured 4 extension, the interface sketch as below:

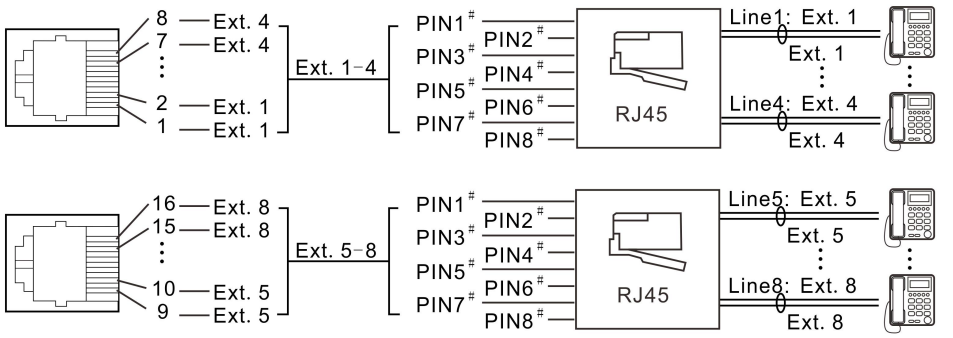

Sketch 2- 8

2.3 Attention before installation

Please pay attention to the important items of installation:

1. The system should be installed at a stable indoor place with dry, ventilated environment.(Temperature Range: 0-45℃ , Humidity Range :20%-80%.Avoid straight sun shine or in the environment of flammable or corrosive gas.) standard telephone wire is preferable.

2. A marginal space around the exchange should be remained for heat sink, inspection and maintenance of the system.

3. Wall installation and desk installation are allowed. But pay attention that the wall bolt do not contact with the circuit boards inside the main frame to avoid damage to the circuit boards.

4. Please keep the system away from other equipment producing large electromagnetic disturbance (such as motor and large transformer).

5. Telephone lines should not wire together with power supply cable or antenna cable. Neither should the extension be close to antenna for air broadcasting (including short-wave).

6. Avoid damage to the power-supply cable. Keep it away from water. Cut off the power immediately when water leakage happens.

7. Please don't strike or shake the system at any situation. Don't move the system in working status.

8. If the wiring pipeline of the extension is interfered by electromagnetic wave while substitution is unavailable in site, special insulating wire is suggested, also, the insulating net of which should be grounded.

Warning：

1. The wiring should not be done in lightning.
2. Avoid using telephone in thundering.
3. Please don't use the telephone in flammable and leaking gas environment.

4. Unless the equipment is disconnected, please don't touch the broken part of the wiring or any connection ends.

Note:Lightning stroke is an accident, which will not be regarded as normal maintenance

2.4 Installation steps(for initial installation)

1) Open-case inspection

Installation checklist

- ✧ Power lead…… 1pc
- ✧ 9 pins double head connecting cable……1pc
- ✧ PC software CD……1pc
- ✧ Installation manual……1pc
- ✧ Telephone cable(for Ext.port test)…1pc
- ✧ Angle bracket(for rack)……1pc
- ✧ 4*6 flat head screw(for rack)…10pcs

2) System inspection

Before installation, inspect carefully whether each components is loosen. Reinsert all cards tensely before power on system is preferred

3) Power on

Make sure AC power switch and system RUN switch are in off status, then power on the system, when turn on AC power switch at the first time, check whether the indicator is on, then turn on RUN switch, now the indicator on CPU card start cross flashing, and power indicator on trunk card and extension card is on, the RUN indicator start quick flashing(0.3s on,0.3s off). After about ten seconds, the RUN indicator on CPU card is 1s on, 1s off, indicates CPU card is working normally. The RUN indicator on each extension card and trunk card start slow flashing(1s on, 1s off), indicates the communication with CPU card is normal.

4) Safety installation code

When wiring the system, to avoid the danger as fire, electric shock and injury, please always observe basic safety precautions. Contains following aspect:

- ✧ Don’t install telephone cable during lightning
- ✧ Don’t install telephone jack in the damp place
- ✧ Don’t touch uninsulated telephone cable or terminal.
- ✧ Caution when install or refit telephone cable.

5) Notice for wiring

- ✧ Don’t parallel wiring telephone cable with AC power or network cable, if telephone cable close to these cable, shield with metal tube, or use cable twist with screening and make grounding
- ✧ If wiring on ground, please use protective tube to avoid tread. Avoid wiring on carpet.
- ✧ Avoid using the same power socket with computer or other office device, otherwise the operation on system probably will be interrupted by induced noise generated by these device.
- ✧ Before wiring, please unplug the power connector. After finish wiring,plug in the power connector.
- ✧ Wrong wiring will bring about abnormal working for the system. If some extension can not work normally, please remove your telephone cable,and use the allocated short telephone cable to test this port.

- ✧ The system is with 3 pins grounding connector. It is for safety purpose, if you can not use this connector, please contact with installer.
- ✧ The Trunk line should be installed together with lightning protector.

6) Case grounding

Case must be grounding !! As below sketch



Sketch 2- 9

Grounding steps:

i.Screw off the screws
ii.Insert grounding line(user self offer)
iii.Screw up the screws.
iv.Connect the grounding line to ground.

7) Connect Trunk line

Steps

Connect Trunk line from provider through MDF module or use RJ45 connector to TRK card of system

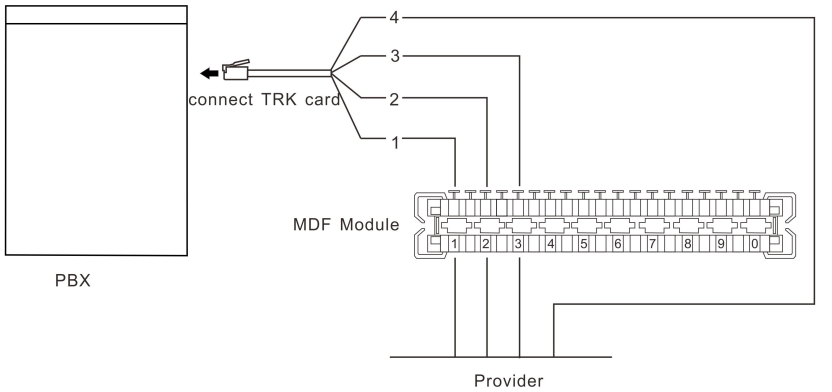

Sketch 2- 10

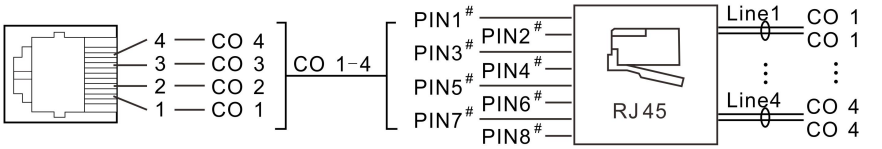

Sketch 2- 11

8) Install lightning protector

In order to prevent the damage to system from lightning, we highly recommend install lightning protector device to trunk line.

sketch as below

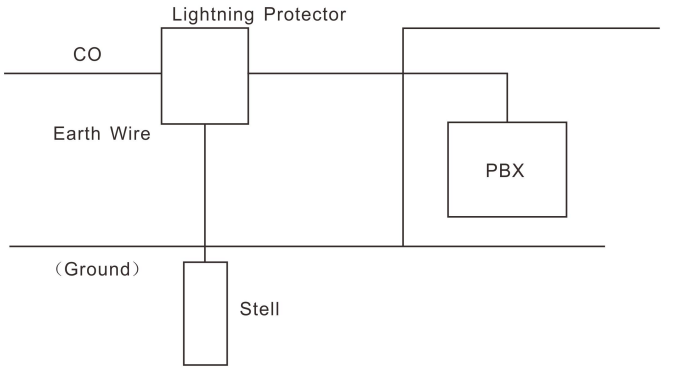

Sketch 2- 12

9) Telephone wiring

Module installation sketch on cabinet as below 2-13

Steps:

i.One end of telephone line connect with MDF module or use RJ45 connector to connect extension card(USER) of system

ii The other end of telephone line through MDF module or use RJ11 connector to connect with telephone, as below sketch 2-13

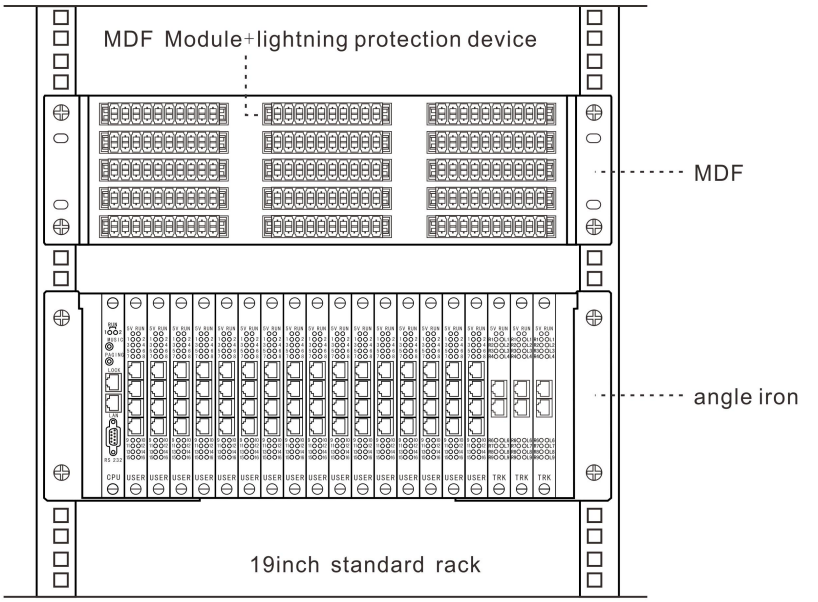

Sketch 2- 13

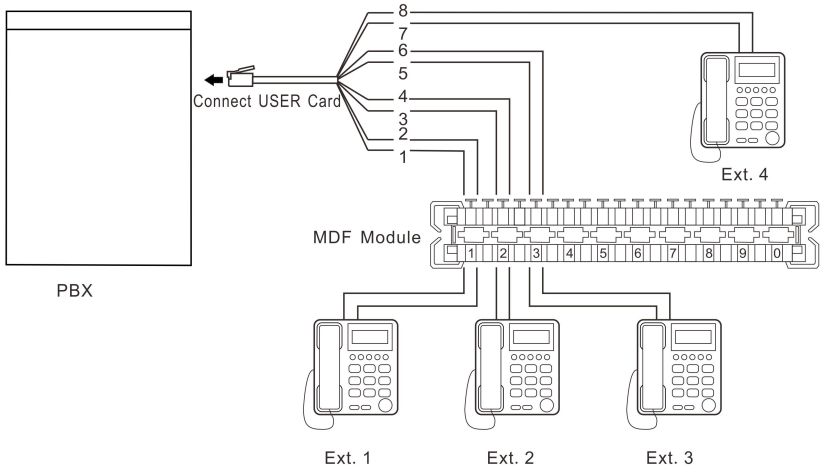

Sketch 2- 14

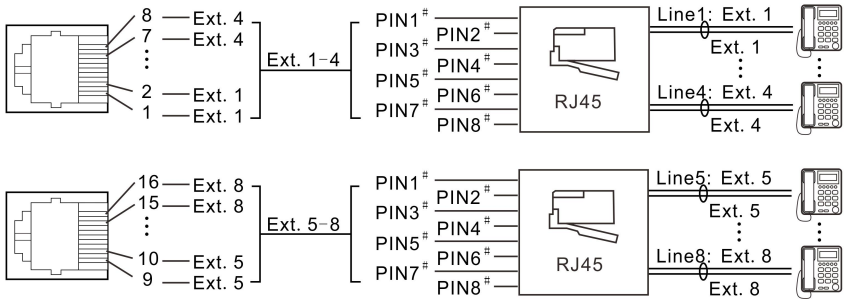

Sketch 2- 15

10) Connect external paging device(broadcast)

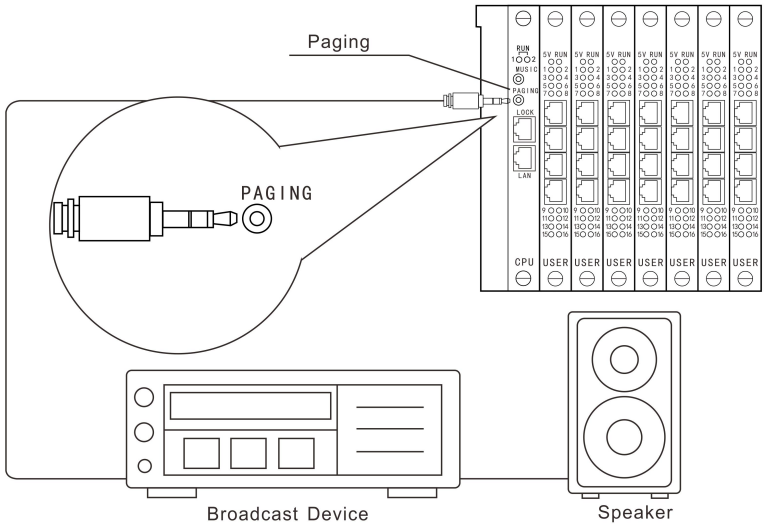

Sketch 2- 16

11) Connect external music player

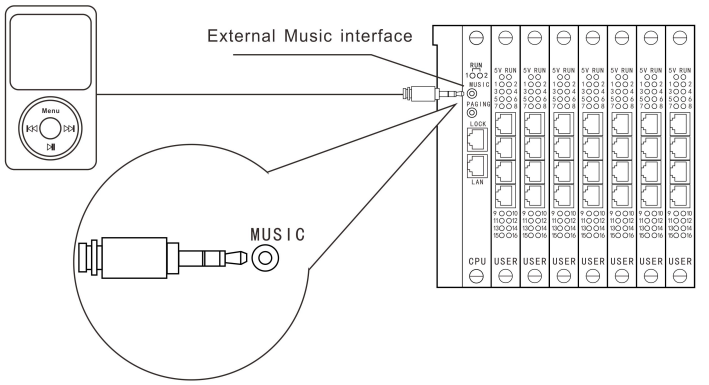

Sketch 2- 17

Instruction

- ✧ By using PC software(D600)of system, user can download voice from audio file into system, use it as voice message in auto attendant work mode(details please refer to PC software Instruction)
- ✧ After connect external music source, system will auto switch into external music status.
- ✧ If user don't need to use external music, please unplug the audio cable.

12) Door lock opener

As following sketch, connect RJ45 connector with LOCK jack of system.

☞ Model TP240 only have 2 door lock .

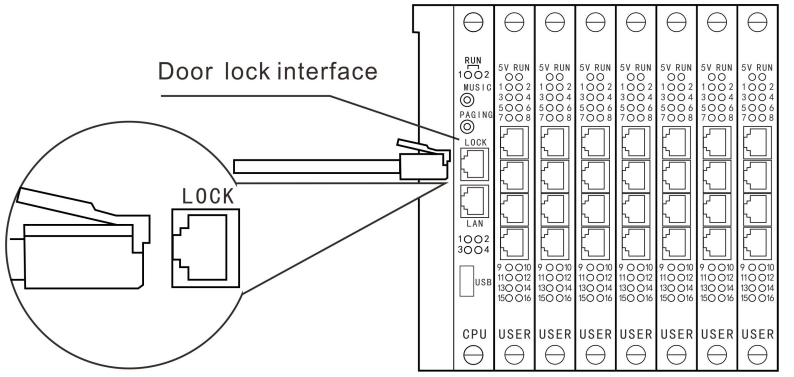

Sketch 2- 18

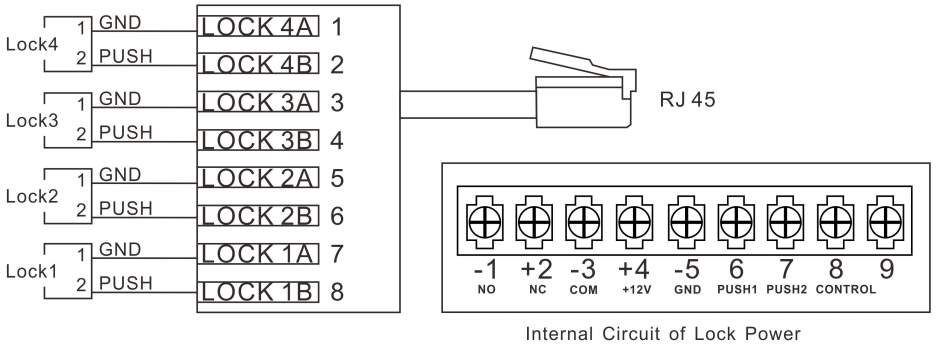

Sketch 2- 19

Notes:

- ✧ Door lock opener interface just provide control signal, user need to provide door lock power supply unit
- ✧ On sketch showing, L0CK1A LOCK2A LOCK3A LOCK4A connect door lock power supply GND junction, LOCK1B LOCK2B LOCK3B LOCK4B connect door lock power supply PUSH junction.
- ✧ The system can provide up to 4 door lock opener control signal.

13) Connect backup battery

As following sketch, connect 24V DC power with system.

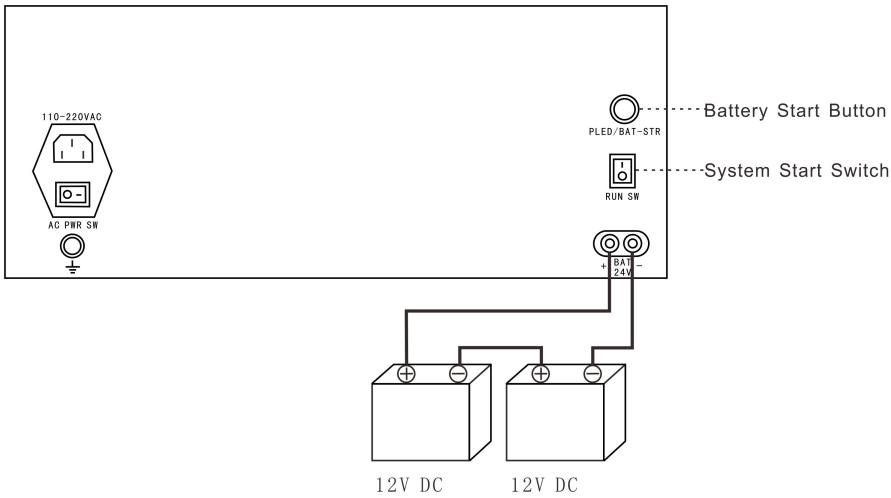

Sketch 2- 20

Notes:

- ✧ When power failure, system can be connected with 24V battery to supply power.
- ✧ The positive pole of battery connect with red terminal, negative pole of battery connect with black terminal.
- ✧ When system use utility power, output 28V voltage to recharge for battery。
- ✧ **When power failure, connect backup battery, user need to turn on switch of battery, and turn on "PLED/BAT-STR" switch on system.**

14) Connect key phone(optional)

User can change the first 16 ports extension card into special 8 ports key phone extension card.



Chapter 3 Glossary Interpretation and Default Setting

3.1 Glossary interpretation

- Flash hook: it is an operation, generally it is used when doing call transfer, pat the hook of telephone around 1 second, then release it. If the operation is correct, system will give continuous beep confirmation tone. If not hear beep tone or hear three single beep tone, means operation is failed, need to redo it. This operation is correspond to press R key(or Flash key)on telephone.
- Off-hook/On-hook:Off hook means pick up the handset of telephone. On-hook means hang up the handset of telephone.(if use handsfree, press HF key is also an operation of off-hook, press again is an operation of on-hook)

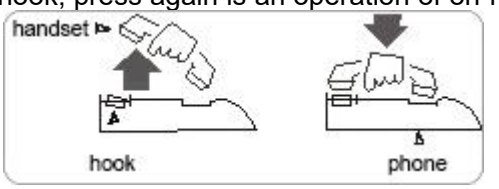

Sketch 3- 1

- Trunk line: means the line from provider, also called CO Line. Connect with TRK port 01-32 of system.
- Internal line: means user line, connect with USER port 001-256 of system. The telephone connected is called extension
- Direct dial out mode: extension connect with the exchanging network from provider directly, user hear the external dial tone, can dial external number directly, can also dial * to use indirect dial out mode.
- Indirect dial out mode: extension connect with internal exchanging network of system, user hear internal dial tone, can dial internal extension directly, or dial 9 to switch into direct dial out mode.
- Auto attendant: system built in voice welcome message, also called OGM. Play different voice to caller according to different situation(on default setting, no OGM recorded)
- Operator: also called reception(or information)extension. When external caller call in, dial 0 for operator, or in internal line status, dial 0 for operator. This system can be set 4 operator. When incoming call arrives, will ring the first operator firstly,if busy will ring the second operator. On default setting, the second user port(Ext.6002) is the first operator, the first port(Ext.6001)is the second operator.

3.2 System initial parameter value(default setting)

- System programming password is 0000
- The first operator is Ext.6002, the second operator is Ext.6001
- Ext dial 0 to call operator
- Extension number range from 6001 to 6255

- Ext group number is 8001 to 8032
- The members of Ext.group and trunk group: no setting
- Trunk port 01-08 are enabled, 09-32 are disabled.
- Ext dial “9” for outgoing call, all extension can dial any call(restriction level is 1)
- Ext pickup level is 3, can only pickup self hold line and designated ringing extension.
- All extension in day/night mode allowed to access all trunk line.
- Internal hotline, IP prefix dialing, memory dialing, LCR, fax, dynamic locking are not enabled
- Day/night mode is manual mode, auto-attendant is available in both day and night mode
- Outgoing call is in average traffic mode. Trunk line is in duty-cycle operation
- All trunk line is in manual ringing mode. When trunk line incoming call arrives, Ext.6002 will ring
- When no dial in OGM mode, or busy or no answer, trunk line will be cut off
- Call forward(always/busy/no answer)setting protect while power failure: no setting
- Caller ID receiving mode is auto detect mode
- Call billing is delayed mode, when incoming call arrives, no billing, delayed time is 5s.
- The ringing time for intercom call is 30s, call transfer time is 25s, call forward(busy/no answer) time is 20s.
- Trunk line reservation time is 120s.
- Weekend mode is no setting, day/night work time is no setting.
- Maximum flash time is 1000ms

Chapter 4 Quick Setting & Operation Instruction

4.1 Quick setting(Initial setting method)

When use this system at the first time, please enable trunk line according to practical situation, and set system working mode for Trunk line incoming call. This chapter is a quick setting steps, for more detailed setting please refer to Chapter V & Chapter VI

4.1.1 Enter system programming status

Please use any one of the first 4 extension(Ext.6001-6004)to program this system. Here let's take example for Ext.6001 as programming extension: off-hook Ext.6001, input *#*0000, after hear a single beep tone, means system is in programming status. User can continue to input other code to program the system.

☞**Notes:**

If you need to restore default setting, in programming status, input 0000#, after hear a beep tone, input 9000#, after hear a beep tone, system will be restored default setting.

4.1.2 Enable trunk line

If you need to access trunk line or receive external incoming call, firstly you must enable the trunk line to be connected, and disable the trunk line to be not connected.

Notes:on default setting, No.1-8 trunk line is enabled,No.9-32 trunk line is disabled

Case 1: Enable trunk line 01 and 02

Setting step: firstly enter programming status(off hook Ext.6001, input *#*0000), input 601# (disable all Trunk line port),after hear a beep tone input 6000102#, after hear a beep tone, Trunk line 01 and 02 port are enabled.

Case 2: Enable No.01-10, No.15 trunk line, the other trunk line port are disabled.

Setting step: firstly enter programming status(off hook Ext.6001, input *#*0000), input 601#(disable all Trunk line port), after hear a beep tone, input 60001*1015#, after hear a beep tone, Trunk line 01-10 and Trunk line 15 are enabled.

4.1.3 Manual working mode for trunk line incoming call(operator mode)

On default setting, when trunk line incoming call arrives, system will ring Ext.6002, if busy will ring Ext.6001(More detailed setting please refer to 5.16.1)

4.1.4 Auto-attendant working mode for trunk line incoming call(OGM mode)

Auto-attendant mode: when trunk line incoming call arrives, caller will hear a voice guidance message, below is two common application:

Case 1: OGM is only played when trunk line incoming call arrives(one section mode)
Setting step: enter programming status(*#*0000),input 1101#, after hear a beep tone, record the message by handset. For example: “Welcome dial ABC company, please dial extension number or dial 0 for operator, for fax please dial 6008”. After finish the recording, please on hook handset.
If you want to check the recorded message, in programming status(*#*0000), input 1211#, now you can hear the recorded message and check whether it’s ok. After finish playing, you will hear a beep tone, if it’s not ok you can input 1101 to record again. If it’s ok, you can continue to input 621#(set auto attendant working mode for system), after hear beep tone, input 65501#(set OGM in single section).

Case 2: OGM will be played the first section when Trunk line incoming call arrives, OGM will be played the second section when dialed extension is busy, OGM will be played the third section when dialed extension no answering. (Three section mode)
Setting step: enter programming status(*#*0000),input 1101# to record the first level message after hear a beep tone,, then input 1102# to record the second level message(like “Sorry, the extension you dialed is busy, please dial other extension number or try again later”)after hear beep tone, then input 1103# to record the third level message(like “sorry the extension you dialed no one answering please dial other extension number or try again later”)after hear beep tone. After finish recording, input 621#(in programming status)to enable auto attendant work mode, after hear beep tone input 6503# to set OGM in three section mode.

4.1.5 Ext.port number inquiry and Ext number coding

On default setting, the extension number is 6001 to 6255, the Ext. Number can be flexible coding in 2-6 digits, different Ext can be coding different digits. And user can check Ext number by caller ID telephone or voice report.

Mode 1: inquiry by caller ID

Off-hook the corresponding extension, input *#62, after hear a beep tone, on-hook the telephone, after a while you will hear a ring, and you can see the Ext port number on display of telephone, the first 3 digits is port number, the rest digits is Ext number. For example, No.107 port Ext. Number is 6107, then will display 1076107

Mode 2: inquiry by voice report

Off-hook the corresponding extension, input *#62, after hear a beep tone, input #(not on-hook), then you can hear a voice report for port number and Ext number

4.1.5.1 Ext number flexible coding

Case 1: You need to change port 001 extension number(original number is 6001) into 88, change port 002 extension number(original number is 6002)into 666, change port 003 extension number(original number is 6003)into 123456. The operation steps: enter programming status(*#*0000), input 9000188#, after hear a beep tone, then input 90002666#, after hear a beep tone, input 90003123456#

Case 2: You need to change port 001- 100 Ext number(original is 6001-6100)into 200-299, change port 101-200 Ext number(original is 6101-6200)into 80001-80200, the operation step is: enter programming status(*#*0000), input 90001*100200#, after hear beep tone, input 90101*20080001#

Case 3: You need to change all Ext(original is 6001-6255)into 8001-8255, the

operation step is: enter programming status, input 918001#

4.2 Quick operation instruction

4.2.1 Dial extension

Dial step: off-hook(such as Ext.6005), after hear internal dial tone(continuous beep tone), dial the corresponding extension number directly(such as dial 6003), then Ext.6003 will ring, off-hook, can talk with Ext.6005. Any party on hook, the other party will hear engaged tone.

Call booking steps: similar as above example, when Ext.6005 call Ext.6003, if 6003 is busy then 6005 will hear busy tone, now Ext 6005 can press #, after hear a beep tone on hook. When Ext 6003 is free, system will ring Ext.6003 and 6005 at the same time. Any extension off hook at first will hear ring back tone, when the other extension off hook, they can talk each other.

4.2.2 Dial operator

Off-hook, after hear internal dial tone, dial 0 to call operator directly.

On default setting, the first operator is Ext 6002, the second operator is Ext 6001, when other extension dial 0, if first operator Ext 6002 is busy, will ring Ext 6001. If you want to cancel the second operator, off hook on 6001, input *#*0000, after beep tone input 041#. If you want to add the third operator(i.e. Ext. 6006 as the third operator), in programming status input 043006#

4.2.3 Trunk line outgoing call operation

Mode 1: Dial 9 for outgoing call

Off hook extension, after hear internal dial tone, dial 9 then hear external dial tone, dial the desired outgoing number.

Mode 2: Select trunk line

Off hook extension, after hear internal dial tone, dial #1 + Trunk line port number(two digits). For example if you want to select no.2 Trunk line, you can dial #102, now you can access Trunk line 2 for outgoing call

Trunk line booking operation

As above operation, if user can not hear external dial tone when dial 9 or #102, but hear internal busy tone(means the line is busy), user can dial # to booking the Trunk line. When there is available Trunk line, system will ring the extension till 10s, user can access this Trunk line when off hook.

4.2.5 Call transfer operation

If operator wants to transfer the incoming call to other extension, can flash hook(or press R key or Flash key), after hear beep tone, dial the Ext number.

☞Notes:

①During call transfer, if the call is hang up always, please flash hook more quickly or refer to Chapter V 5.19.11 (Flash Time Setting)

②When transfer the outgoing call, you can only flash hook after 5 seconds when dial the last digit, otherwise the call will be hang up directly

4.2.6 Call pickup

Call pickup on common extension: Press #3 + ringing Ext number
Call pickup on operator extension: press #9

4.2.7 Call forward to another trunk line

If some Ext user is not on seat, and he wants to forward the incoming call to his cell phone (such as 18923238930), he can off hook his extension, input #81*18923238930, after hear a beep tone, setting is ok. All the call will be forwarding to his cell phone number. During call, he can press * on cell phone to continue with the conversation if hear continuous beep tone. After finish the conversation, he can press# to hang up the call directly.

4.2.8 Trunk line reservation operation

During the conversation with trunk line, operator(or other extension)can reserve this trunk line, and do other operation like call transfer or intercom call. The operation is: flash hook quickly, then press ## after hear a beep tone, now the first Trunk line on hold will hear holding music. If operator need to retrieve the hold trunk line, and press ## again.

Chapter 5 System Programming & Setting Mode

- There are following three setting mode:
  Setting by system programming: setting by programming extension in programming status, need to input programming password to enter programming status. This setting is only used for administrator
- Setting by operator extension: set some of parameter by operator extension,such as system time, day/night work mode,call forward on each extension, morning call, private password etc..This setting mode no need to enter in programming status
- Setting by each extension: each extension can set itself parameter, like call forward, DND, morning call, private password. This setting mode no need to enter in programming status.

5.1 Programming setting notes

- Programming extension is any one of the first 4 extension(Ext 6001-6004)
- All the programming setting must be done in system programming status. And the programming extension should be used with dual tone multi-frequency(DTMF) telephone with the keys as "*","#"
- For all programming step,you will hear a single beep tone if the operation is correct. And you will hear three continuous beep tone if the operation is incorrect.Only after you hear a single beep tone(confirmation tone), you can do the further step programming. And you can do continuous setting but no need to on hook.。
- During programming, for any mistake operation, you can on hook and redo programming or press * , after hear three beep tone, input correct code
- After all programming is finished, the setting will take effect immediately. No need to reboot the system.

5.1.1 Batch setting instruction

The setting of this system include single setting and batch setting. Single setting is only for single extension, batch setting is for the same setting of several extensions

Batch setting has following features:

- Both single & batch setting can be mixed set.
- the code end up with #
- A starting value for the setting object(like trunk/Ext port starting value) should be set at first, then "*" should be input as batch operation, then a ending value for the setting object should be input. Thus the same parameter is setting from starting value to ending value.

Here let's take example for setting outgoing call level in day mode(batch setting code is 320LN_1N_2*N_3…N_5#):

Case 1(for batch setting): set outgoing call level for Ext 6001-6255 as 6, the operation step is: in programming status(*#*0000), input 320 6 001 * 255#

Case 2(hybrid setting): set the outgoing call level for Ext 6001,6003 and 6008-6098, 6100, 6128-6240 as 3, the operation step is: in programming status(*#*0000),

input 320 3 001 003 008 * 098 100 128*240#

Case 3(single setting): set outgoing call level for Ext 6002, 6004, 6012 as 2, the operation step is: in programming status(*#*0000), input 320 2 002 004 012#

5.1.2Glossary

N(N_1\N_2…) ……Ext serial number(3 digits) 001-256
M(M_1\M_2…) ……Trunk serial number(2 digits) 01-32
G ……Ext group number(2 digits) 01-32
S ……Trunk group number(2 digits) 01-32
QQ……Prefix restrict group number(2 digits) 01-16
TT……time parameter(2 digits)
V ……OGM serial number(1 digit) 1-4
U ……Memory dialing number(1 digit) 0-9
D ……OGM level number(1-6)
X ……1 digit, refer to detailed instruction
Y ……1 digit, refer to detailed instruction
P ……1 digit, refer to detailed instruction
YY……Year(2 digits) 00-99
MM……Month(2 digits)01-12
DD……01-31Date(2 digits)01-31
SS…… 01-59Second(2 digits)01-59
W ……Week(1 digit)1-7
L …… （Service level(1 digit) 0-9
K …… Operator serial number/trunk group number(1 digit) 1-4
EFGH …… programming password(4 digits) 0000-9999
ABCD…… Ext number(2-6 digits)
abcd…… prefix number for restriction(1-8 digits)
ab…… prefix (2 digits)
abcdef…… Trunk line number(1-16 digits)

5.2 Setting notes:

The setting includes operator operation and common extension operation, both of them no need to enter programming status

“Operator Operation” in this manual: means it can be only set by operator extension

“Ext Operation”in this manual: means it can be set by any common extension.(also including operator)

5.3 Enter/Exit system programming status

5.3.1 Enter programming status(for first time)

At any one of the first 4 extension(Ext 6001-6004), pick up handset(off

hook),input *#*0000, after hear a beep tone, means system is in programming status



图 5- 1

Notes：0000 is the initialized programming password.

5.3.2 Exit programming status

Programming extension on hook, exit programming status

5.3.3 Change programming password

Code: 09EFGH#

Instruction: EFGH is the new password

5.3.4 Enter programming status(with new password)

Programming code:*#* EFGH
Operator operation : programming extension off hook +*#*EFGH
Instruction : EFGH=password . Default value is 0000

5.4 Restore default setting

Programming Code: 0000#

Note: This code will not restore the extension number and Trunk line status, if you want to restore ext number, use the code 9000#

5.5 System soft reset

Programming Code 09999999#

Instruction: to reset the system when power is on.

5.6 System time setting

5.6.1 Set by programming

Programming code: 01YYMMDDW#

Instruction: YY: year, 2 digits 00-99; MM: month, 2 digits 01-12; DD: date, 2 digits 01-31; W: week, 1 digit 1-7

Case: set system time as Aug,18,2015, Tuesday, input the code 011508182#

Programming Code:02HHTTSS#

Instruction:HH:hour, 2 digits 00-23; TT: minute, 2 digits 00-59; SS: second, 2 digits

00-59

Case: set system time as 12:10:58, input the code 02 12 10 58#

5.6.2 Set by operator

Operator Operation: Off hook + (*)01YYMMDDW#
Off hook + (*)#02HHTTSS#

5.7 Inquiry function

5.7.1 Instruction

User can check system version number, time, day/night status, extension number etc by extension. There are two inquiry mode:

- **Inquiry by caller ID**
- **Inquiry by voice report**

5.7.2 Volume setting for voice report

Programming Code： 1410# Monitor voice report
141P# Volume setting

Instruction :P=00-15, 0 is the minimum value,15 is the maximum value, default setting P = 08

5.7.3 Version number inquiry

Ext Setting: Off hook + (*)#64 + on hook version number inquiry by caller ID
Off hook + (*)#64# version number inquiry by voice report

Instruction: any extension can inquiry version number, the number is in 10 digits, format is 256XXXGGHH

5.7.4 System time inquiry

Ext Setting: Off hook+ (*)#66 +on hook inquiry year/month/date/week by caller ID
Off hook+(*)#66# inquiry year/month/date/week by voice report
Off hook+ (*)#63 + on hook inquiry hour/minute/second by caller ID
Off hook+ (*)#63# inquiry hour/minute/second by voice report

5.7.5 Extension work status inquiry

Ext Operation: Off hook +(*)#65 + on hook inquiry Ext work status by caller ID
Off hook + (*)#65# inquiry extension work status by voice report

Instruction: the status value is in 12 digit
1st digit: outgoing mode, 0: direct, 1:indirect
2nd digit: forward authority, 0:prohibit, 1: allow
3rd digit: internal hotline, 0: enabled, 1:disabled
4th digit: IP prefix dialing, 0: allow, 1: prohibit
5th digit: Ext call Ext, 0: prohibit, 1: allow
6th digit: Memory dialing, 0: prohibit, 1: allow
7th digit: Forward to trunk line, 0: prohibit, 1: allow
8th digit: Internal incoming call, 0: prohibit, 1: allow

9th digit: Intercom extension, 0: yes, 1: no
10th digit: Dynamic locking, 0: enabled, 1: disabled
11th digit: Work mode, 0: day mode, 1: night mode
12th digit: work mode, 0: manual, 1: auto

5.8 Music on hold

System is built in piano pattern music on hold, also with external music input interface. Notes: if no need to use external music, please remove the audio cable. There are two mode to monitor the on hold music

5.8.1 Monitor the on hold music in programming status

Programming Code: 1400#

5.8.2 Monitor the on hold music by any extension

Ext operation: off hook + (*)#60

5.9 Enable/Disable trunk line

Programming code: 600# Enable all trunk line
600M# Enable No.M trunk line
600M_1M_2*M_3…M_5# Batch setting to enable No.M_1M_2*M_3…M_5 trunk line
601# Disable all trunk line
601M# Disable No.M trunk line
601M_1M_2*M_3…M_5# Batch setting to disable No.M_1M_2*M_3…M_5 trunk line

Instruction: M、M_1、M_2、M_3、M_5 is Trunk line port number 01-32. The trunk line has to be enabled if the port is connected, if not connected, trunk line has to be disabled.

Case: on trunk port 1,2, 9-16 are connected ten trunk lines, the other port not connected. Setting mode is: in programming status, input 601#, then input 600 01 02 09*16#

5.10 Ext number/Ext Group number and members

5.10.1 Ext number flexible coding

5.10.1.1Single setting Ext number

Programming code: 90NABCD# Change No.N Ext new number as ABCD

Instruction: N is Ext port number, N=001-255, ABCD is new number in 2-6 digit,

Case: change No.008 port(Ext.6008)number as 8008, in programming status, input 90 008 8008#

I**nstruction:** 1. Ext number can not be set with prefix 0, 9 and LCR prefix number

2. Each Ext number can not be identical or duplicate(i.e: 60 and 6001 are duplicate)

5.10.1.2 Batch setting Ext number

Programming code: 90N_1*N_2ABCD# Batch setting Ext.N_1-N_2 No.(from ABCD auto add 1 digit)

Instruction: N_1 is the port number of starting Ext, N_2 is the port number of ending Ext, port number range from 001-255

Case:change No.008-138 port(Ext 6008-6138)to 8008-8138, change Ext 6168-6200 to 60168-60200, in programming status, input 90 008*138 8008#, after a beep tone, input 90 168*200 60168#

5.10.1.3 Batch setting all Ext number

Programming code: 91ABCD# batch setting all Ext number(from ABCD auto add 1 digit)

Case: Set all Ext number(6001-6255)as 8001-8255, in programming status, input 91 8001#

5.10.1.4 Restore all Ext number to default setting

Programming code: 9000#

Instruction: in programming status, input 9000#, all the Ext number will be restored to default 6001-6255. This code will not affect Ext group number

5.10.1.5 Ext number inquiry

Ext Operation: Off hook + (*)#61 + on hook, inquire Ext number by caller ID
Off hook + (*)#61# inquire Ext number by voice report

Case: inquire the number for Ext.6007, off hook, input #61, then on hook, will display “6007”on telephone

5.10.1.6 Ext port number and Ext number inquiry

Ext Operation: Off hook + (*)#62 + on hook, inquire Ext port number and Ext number by caller ID
Off hook + (*)#62#, inquire Ext port number and Ext number by voice report

Case: If No.007 Ext number is 8007, then will display 0078007

5.10.2 Ext group number & members

5.10.2.1 Ext group instruction

- This system can be set up to 32 Ext group, group number is 01-32, each group can be added any extension from No.001-255.
- The members of each Ext group can be duplicate
- When external caller call Ext group, all members in group will ring simultaneously

5.10.2.2 Single setting Ext group number

Programming code: 92GABCD#

Instruction: change No.G Ext group into new number ABCD, ABCD is new Ext group number, 2-6 digits. G is group number 01-32

Case: change Ext number in No.01 Ext group as 21, in programming status, input 92 01 21#

5.10.2.3 Batch setting Ext group number

Programming code: 92G_1*G_2ABCD#

Instruction: Batch setting the number in No.G_1-G_2 Ext group (from ABCD auto add 1 digit)

Case: change the number in No.3-8 Ext group as 303-308,in programming status,input 92 03*08 303#

5.10.2.4 Batch setting number in all Ext group

Programming code: 93ABCD# batch setting all Ext group number(from ABCD auto add 1 digit)

Case: change the number in Ext group as 8301-8332,in programming status, input 93 8301#

5.10.2.5 Restore Ext group number to default setting

Programming code: 9200#

Instruction: in programming status, input 9200#, all Ext group number will be restored to 8001-8032

5.10.2.6 Ext group member setting

Programming code: 94GN_1N_2*N_3…N_5#

Instruction: set the members in No.G Ext group. G is Ext group 01-32, N_1、N_2、N_3、N_5 are Ext port number 001-255

Case: Set the members in No.1 Ext group as 6001,6002,6009-6018, total 12 Ext, in programming status, input 94 01 001 002 009*018#

5.10.2.7 Clear Ext group members

Programming code: 94G# clear the members in No.G Ext group
9400# clear all Ext group members

Notes: for initial setting, we suggest at first use 9400# to clear all members, then set

5.11 Ext dial out mode

Programming code: 200# Set all Ext as direct dial out mode
200 N_1N_2*N_3…N_5# Batch setting some Ext as direct dial out mode
201# Set all Ext as indirect dial out mode
201 N_1N_2*N_3…N_5# Batch setting some Ext as indirect dial out mode

Default setting: all Ext are indirect dial out mode, dial 9 for outgoing call

Case: Set Ext 6001-6008, 6020 as indirect dial out mode, in programming status, input 200 001*008 020#

5.12 Operator function

5.12.1 Set operator

Programming code: 04KN# Set No.N Ext as No.K operator
04K# Clear No.K operator

Instruction: 1. N is Ext port number N=001-255, K is the operator serial number K =1-4
2. Any Ext can be set as operator(1-4), when the first operator is busy, will ring the second operator, and so on.

Case: Set Ext 6003 as second operator, in programming status input 04 2 003#

Default setting: the first operator is Ext 6002(port number is 002), the second operator is Ext 6001(port number is 001), the third & fourth operator are not set.

5.12.2 Enable/Disable fast dial operator

Programming code: 0400# Enable fast dial operator(dial 0 for operator)in internal status, this is default setting
0401# Disable fast dial operator in internal status

Notes: this code is only for dial 0 for operator in internal status, no affect the setting in auto attendant work mode(dial 0 for operator).

5.12.3 Fast dial operator setting

Programming code: 004X#

Instruction: set dial X for operator, X = 0-9. If Ext is in indirect dial out mode, dial X to call operator directly, no need to dial operator Ext number. If in direct dial out mode, need to dial * back to internal status, then dial X

Default setting X = 0

Notes: 1. The code for fast dialing operator should be different with Trunk line outgoing code, otherwise will cause dial confusion.
2. This setting will affect the operation in auto attendant work mode(dial 0 for operator)

5.13 Day/Night work mode

Day/night work mode indicate the extension working status. There are manual mode and auto mode. Manual mode is operated by operator, auto mode is switching according to the time set. On default setting, system is in manual day/night mode.

5.13.1 Day/Night switch mode

Programming code: 0300# Set system in manual day/night work mode
0301# Set system in auto day/night work mode

Operator Operation: Off hook + (*)#22# set system in auto day/night work mode
Off hook + (*)#23# set system in manual day/night work mode

5.13.2 Set Day/Night mode switching date & time

Programming code: 031$HHTT_1HHTT_2HHTT_3HHTT_4$# Set the timetable for work mode 1

032$HHTT_1HHTT_2HHTT_3HHTT_4$# Set the timetable for work mode 2

033W_1W_2*W_3…W_5# Set the date of full work(full day work mode)

034W_1W_2*W_3…W_5# Set the date for full break(full night work mode)

035W_1W_2*W_3…W_5# Set the date for work mode 1(normal work mode)

036W_1W_2*W_3…W_5# Set the date for work mode 2(Saturday mode)

Instruction: 1. HH - hour 00-24,TT - minute 00-59

$HHTT_1$ is the work time in the morning(also the starting time in day); $HHTT_2$ is the closing time in the morning(also the starting time for lunch);

$HHTT_3$ is the work time in the afternoon(also the ending time for lunch);

$HHTT_4$ is the closing time in the afternoon(also the starting time in night)

2.W_1、W_2、W_3、W_5 is week 1-7, can set some date as one of the following 4 mode

A). Full day mode: if system is set in this mode, will auto switch into full work mode, all the setting is as per day work time.

B).Full night mode: if system is set in this mode, will auto switch into full break mode, all the setting is as per night work mode

C).Work mode 1: if system is set in this mode, will auto switch different work mode(status). For example, Monday to Friday is work day, is suitable for this mode

D).Work mode 2: if system is set in this mode, will auto switch different work mode(status). For example, Monday to Saturday is work mode.

Case: Set Monday to Friday 08:00-12:00, 14:00-17:30, Saturday 08:00-12:00 is work time, Saturday afternoon and Sunday is break time. Setting way is: in programming status, input 031 0800 1200 1400 1730#(set the timetable for work mode 1), after hear a beep tone, input 032 0800 1200 1200 1200#(set the timetable for work mode 2), after hear a beep tone, input 03407#(set Sunday is break time), after hear a beep tone, input 035 01*05#(set Monday to Friday is in work mode 1), after hear a beep tone, input 03606#(set Saturday is in work mode 2)

Notes: Above setting is only valid in auto day/night work mode

5.13.3 Day/Night work mode in manual

Operator Operation: Off hook + (*) #20# set system is in day work mode

Off hook + (*) #21# set system is in night work mode

5.14 Intercom call

5.14.1 Ringing time for intercom call

Programming code: 080TT# Set ringing time for intercom call

Instruction: TT=00-99,unit is second, 00 means ring always

Notes: this time should be more than the time for call transfer and call forward. Otherwise will cause the ringing of chaos

Default setting: TT=30

5.14.2 Intercom call priority

Programming code: 240# Restrict intercom call for all Ext.

240N_1N_2*N_3…N_5# Batch setting restrict intercom call for some Ext.

241# Allow intercom call for all Ext.

241N_1N_2*N_3…N_5# Batch setting allow intercom call for some Ext.

Instruction: When Ext is restricted for intercom call, can only dial operator

Default setting: All Ext is allowed for intercom call

5.14.3 Ext group call mode

Programming code: 0630# Set Ext group in conference mode

Instruction: In this mode, when call Ext.group, all member Ext will ring simultaneously, and each Ext can talk with the calling Ext if off hook, the other Ext on hook keep ringing

Programming code: 0631# Set Ext group in common call mode,this is default setting

Instruction: In this mode, when call Ext group, all members Ext will ring simultaneously, and when any Ext off hook to talk with calling Ext, the other extension stop ringing.

5.14.4 Intercom call operation method

5.14.4.1Dial operator

Ext operation: Off hook + (*) + 0

Instruction: no need to dial * in indirect dial out mode

5.14.4.2 Dial Ext

Ext operation: Off hook + (*) + Ext number

Instruction: 1. No need to dial * in indirect dial out mode

2. Intercom call can be picked up as well.

5.14.4.3 Dial Ext group

Ext operation: Off hook + (*) + Ext group number

Instruction: this operation is only valid when Ext group number & members are set.

5.14.4.4 Internal line booking

Ext operation: When Ext.A call Ext.B, if B is busy, A can press #, on hook after hear beep tone. When B is available, both of two Ext will ring simultaneously.they can talk each other when off hook

☞ ①Booking is not available for Ext. Group calling or wrong number dialed.

②After booking, Ext can do other operation. But no save if power failure.

5.15 Outgoing call

Outgoing call is also called dial external number,it is related to dial out mode, When Ext is in direct dial out mode,for outgoing call, can dial the external number directly, for intercom call, need to dial *(back to internal status) + internal number. When Ext is in indirect dial out mode, for outgoing call,need to dial 9 + external number.

5.15.1 Outgoing call code setting

Programming code: 002X#
Instruction: X = 0-9, when Ext make outgoing call in indirect dial out mode, need to access the line by dialing this code.
Default setting X = 9

5.15.2 Outgoing call traffic mode

Programming code: 0600#
Instruction: Set the outgoing call(dial outgoing code 9) traffic mode is duty-cycle operation(average traffic), the duty-cycle mode is from small to high

Programming code: 0601#
I**nstruction:** Set the outgoing call(dial outgoing code 9) traffic mode is accessing trunk from the lowest port.
Default setting: Average traffic mode.

5.15.3 Trunk group

Trunk group member setting
Programming code: 95S M1*M2*M3…M5# Set members in No.S trunk group
Instruction: S is trunk group number, 01-32. M_1、M_2、M_3、M_5 are trunk port number 01-32.
Case: Set the members in No.1 trunk group is all trunks, in No.2 trunk group is 01-08 trunks. Setting way: in programming status, input 95 01 01*32#, after hear a beep tone, input 95 02 01*08#
Programming code 95S# Clear the members in No.S trunk group
9500# Clear the members in all trunk group
☞ **Notes:**For initial setting, please use 9500# to clear all trunk group members

5.15.4 Ext access trunk

5.15.4.1 Ext access trunk in day mode

Programming code: 300# Allow all Ext accessing all trunk in day mode
300S# Allow all Ext accessing No.S trunk group in day mode
300SN# Allow No.N Ext accessing No.S trunk group in day mode
300SN_1N_2*N_3…N_5# Batch setting Ext.N_1N_2*N_3…N_5 accessing No.S trunk group in day mode
301# Prohibit all Ext accessing all trunk in day mode
301N# Prohibit No.N Ext accessing all trunk in day mode

5.15.4.2 Ext access trunk in night mode

Programming code: 310# Allow all Ext accessing all trunk in night mode
310S# Allow all Ext accessing No.S trunk group in night mode
310SN# Allow No.N Ext accessing No.S trunk group in night mode
310SN_1N_2*N_3…N_5# Batch setting Ext.N_1N_2*N_3…N_5 accessing No.S trunk group in night mode
311# Prohibit all Ext accessing all trunk in night mode
311N# Prohibit No.N Ext accessing all trunk in night mode

Instruction: S is trunk group number S = 00-32, when S=00, means Ext can access all trunks.N、N_1、N_2、N_3、N_5 =001-255, is Ext port number

Default setting: All Ext can access all trunks in both day and night mode

5.15.5 Outgoing call level setting

5.15.5.1 Instruction for outgoing call level

This system can restrict the outgoing call number beginning with some prefix, or only allow outgoing call number beginning with some prefix. There are 10 level, from 0 to 9

L=0 Outgoing call can be made only for special prefix item E
L=1 Outgoing call no restriction
L=2 Outgoing call is restricted for prefix item A, for initial setting international direct dialing(IDD) is restricted(prefix 00)
L=3 Outgoing call is restricted for prefix item B, for initial setting domestic direct dialing(DDD)is restricted(prefix 0)
L=4 Outgoing call is restricted for prefix item A and item C
L=5 Outgoing call is restricted for prefix item A and item D
L=6 Outgoing call is restricted for prefix item B and item C
L=7 Outgoing call is restricted for item B and item D
L=8 Outgoing call is restricted for item C and item D
L=9 Outgoing call is total restricted, only for intercom call

Instruction: Some level is related to the prefix item A-D, and the prefix in each item can reach 8 digit(1-8 digit is OK)number of 16 groups

Generally, item A is used for restriction of IDD, item B is used for restriction of DDD, item C is used for restriction for hotline number, item D is used for restriction of item IP prefix number

5.15.5.2 Setting restriction prefix item A-D

Programming code: 96 X QQ abcd # Set prefix number abcd for No.QQ group of item No.X

Instruction: 1. X is the item number, 1-4

2. QQ is group number of prefix, 01-16

3. abcd is prefix number,no restriction of digits, 1-8 digit is ok, end up with # if not enough 8 digits. Each digit can be 0-9 or * (* is wildcard, can replace with any number)

Default setting: the first prefix in item A is 00, the first prefix in item B is 0, no setting for item C and item D

5.15.5.3 Special prefix setting

Programming code: 96 5 QQ abcd# Set the special prefix in group QQ as abcd
Default setting: the first special prefix is 110, the second special prefix is 119, the third special prefix is 120

5.15.5.4 Clear special prefix

Programming code: 9600#
Instruction: Clear all restriction prefix and all special prefix in all item
Programming code: 96X#
Instruction: Clear all restriction prefix in item X(X=1-4 clear corresponding item A-D prefix, when X=5, clear special prefix)
Programming code: 96XQQ#
Instruction: Clear item group QQ prefix in item X (X=1-4,clear corresponding item A-D prefix, when X=5, clear special prefix)

☞**Notes:** 961# code, to clear the prefix(00) restriction for IDD in item A

5.15.5.5 Special number access setting for level 2-8

Programming code: 0680# Special number access is available for outgoing call level 2-8, this is default setting
0681# Special number access is prohibited for outgoing call level 2-8

5.15.5.6 Outgoing call level setting

Default setting: Outgoing call level for all Ext in day mode is level 1, in night mode is level 1, that is no any restriction.

5.15.5.6.1 Outgoing call level setting in day mode

Programming code: 320L# Set outgoing call level is L in day mode for all Ext

320LN# Set outgoing call level is L in day mode for Ext.N

320LN_1N_2*N_3…N_5# Batch setting outgoing call level is L in day mode for Ext.N_1N_2*N_3…N_5

Instruction: N is Ext port number N = 001-255; L is outgoing call level L=0-9

5.15.5.6.2 Outgoing call level setting in night mode

Programming code: 321L# Set outgoing call level is L in night mode for all Ext

321LN# Set outgoing call level is L in night mode for Ext.N

321LN$_1$N$_2$*N$_3$…N$_5$# Batch setting outgoing call level is L in night mode for Ext.N$_1$N$_2$*N$_3$…N$_5$

5.15.5.7 Case

Case I

Requirement: Ext.6001, 6003 are allowed to dial any outgoing call, Ext.6002, Ext.6004-6099 are allowed to dial DDD(but prohibit for IDD), the other Ext are prohibited for DDD, system is not enabled day/night work mode, and in manual day work mode.

Setting method: in programming status, input 9600#, after hear beep tone, input 96 1 01 00#, after hear beep tone, input 96 2 01 0#, then input 320 3#, after hear beep, input 320 1 001 003#, at last input 320 2 002 004*099#

Case II

Requirement:Base on above requirement, system is enabled day/night work mode, keep the same requirement in day mode, but in night mode, Ext.6001, 6003, 6008 are in day level, the other Ext are prohibited for outgoing call

Setting method: in programming status, input 3219#, then input 321 1 001 003#, at last input 321 3 008#

Case III

Requirement: Base on above requirement, Set Ext.6200-6255 can make outgoing call for number 01330281,86228930,86223731

Setting method: in programming status, input 96 5 01 01330281#, after hear beep, input 96 5 02 86228930, after hear beep, input 96 5 03 86223731, then input 321 0 200*255#

Case IIII

Requirement: Base on above requirement,Ext over 6168 are prohibited for outgoing call number prefix with 168, 1790

Setting method: in programming status, input 96 3 01 168#, after hear beep, input 96 3 02 1790#, after hear beep, input 320 6 168*255

Case V

Requirement: Clear above special number 86223731

Setting method: in programming status, input 96 5 03#

5.15.6 Outgoing call duration control setting

Programming code: 33TT# Set call duration control for all Ext is TT

33TTN# Set call duration control for Ext.N is TT

33TTN$_1$N$_2$*N$_3$…N$_5$# Batch setting call duration control for Ext.N$_1$N$_2$*N$_3$…N$_5$ is TT

Instruction: TT is the call duration control time, TT=00-99(unit is minute), when TT=00, no setting.

Case: Set Ext.6002 call duration control is 0, the other Ext call duration is 8 minutes, in programming status, input 33 00#, after hear beep, input 33 08 002*255#

5.15.7 Outgoing call operation method

5.15.7.1 Outgoing call dialing directly

When Ext is in direct dial out mode, can dial the external number directly.

5.15.7.2 Outgoing call by dialing outgoing code firstly

Ext Operation: Off hook + outgoing code + external number
Instruction: The default outgoing code is 9, Ext is in indirect dialing out mode

5.15.7.3 Outgoing call by selecting certain trunk

Ext Operation: Off hook + (*)#1 M
Instruction: M: trunk port number(M = 01-32). When trunk M is occupied, the operation will be not succeed.
Notes: When Ext is in direct dial out mode, no need to dial *

5.15.7.4 Outgoing call by booking trunk line

Ext Operation: In the process of accessing certain trunk(Trunk line), if the trunk is occupied(busy), Ext user can dial # after hear engaged tone(busy tone), after hear a beep tone, on hook. When this trunk is idle available, system will ring back Ext till 10s. Ext and off hook and access this trunk directly.

5.16 Incoming call

This system support 4 work mode for external incoming call:

- Operator work mode: When external incoming call arrives, system ring operator extension.
- Auto-attendant work mode: when external incoming call arrives, system is in DISA(Direct Inward System Access)status, caller will hear the OGM message recorded, caller can dial internal Ext number or dial operator code(default is 0)
- Call center mode: one special usage of operator work mode, also called average traffic. When external incoming call arrives, system will round robin ring internal extension.
- System CRBT(Color Ring Back Tone) mode:when external incoming call arrives,in auto-attendant mode,caller hear OGM, meanwhile system ring internal extension as operator mode or call center mode.

5.16.1 Set work mode

5.16.1.1 Set operator work mode

Programming code: 620# Set operator work mode for all trunk
620M# Set operator work mode for No.M trunk
620M1M2*M3…M5# Batch setting operator work mode for No.M1M2*M3…M5 trunk

5.16.1.2 Set auto-attendant work mode

Programming code: 621# Set auto attendant work mode for all trunk
621M# Set auto attendant work model for N.M trunk
621M1M2*M3…M5# Batch setting auto-attendant work mode for No.M1M2*M3…M5 trunk

5.16.1.3 Set system CRBT mode

Programming code: 622# Set CRBT mode for all trunk
622M# Set CRBT mode for No.M trunk
622M1M2*M3…M5# Batch setting CRBT mode for No.M1M2*M3…M5 trunk

5.16.1.4 Set call center mode

Programming code: 623# Set call center mode for all trunk
623M# Set call center mode for No.M trunk
623M1M2*M3…M5# Batch setting call center mode for No.M1M2*M3…M5 trunk

5.16.2 Incoming call delayed ring setting

Programming code: 61X# Incoming call delayed ring
Instruction: X = 0-3, default setting X =1

When system is in operator work mode, if X=0,1, internal Ext will ring when caller hear the first ring back tone, if X =2, will delayed one ring, that is internal Ext will ring when caller hear the second ring back tone.

When system is in auto-attendant work mode(including CRBT), if X=0, auto-attendant will work when caller hear the first ring back tone, if X=1, auto-attendant will work when receive the CLI and hear the first ring back tone.

☞This code will affect CLI facility and answering effective, use cautiously is preferred.

5.16.3 Relevant setting for operator work mode

5.16.3.1 Operator ringing Ext setting in day mode

Programming code: 7100# Set all incoming call ring operator in day mode
71G# Set all incoming call ring Ext group G in day mode
71GM# Set incoming call from trunk M ring Ext group G in day mode
71GM1M2*M3…M5# Batch setting incoming call ring Ext group G in day mode
7000# Clear all incoming call ringing extension in day mode
70M# Clear incoming call from trunk M ringing extension in day mode

Default setting: all incoming call in day mode, the corresponding ringing extension is operator Ext. That is G=00

Instruction: when G = 01-32, G is Ext group number, when G=00, means operator.
M、M_1、M_2、M_3、M_5 is trunk port number, M=01-32.

5.16.3.2 Operator ringing Ext setting in night mode

Programming code: 7300# Set all incoming call ring operator in night mode
73G# Set all incoming call ring Ext group G in night mode
73GM# Set incoming call from trunk M ring Ext group G in night mode
73GM1M2*M3…M5# Batch setting incoming call ring Ext group G in night mode
7200# Clear all incoming call ringing extension in night mode
72M# Clear incoming call from trunk M ringing extension in night mode

5.16.3.3 Ringing mode setting in operator work mode

In operator work mode, if the ringing extension is over one, there are four ringing mode: one is ring simultaneously, one is ring round robin mode 1(stop the last Ext, and then ring the next Ext), one is ring round robin mode 2(ring last Ext,and at the same time ring the next Ext), one is ring queue(ring any idle extension)

Programming code: 630# Set ring simultaneously mode for operator extension, this is default setting
631# Set ring round robin mode 1 for operator extension,
632# Set ring round robin mode 2 for operator extension,
633# Set ring queue mode for operator extension

5.16.3.4 Ring round robin switching time setting

Programming code: 634TT# Set ring round robin switching time in operator mode
Instruction: TT=01-99, unit is second, default setting TT=10
Notes: We suggest the time for ring round robin is integral multiple of incoming call ring(normally the incoming call ring time cycle is 5s,that is 1s on, 4s off). And the ring round robin time is not too long, 1-3 ring is preferred.(as 05/10/15)

5.16.3.5Ringing extension busy process in operator mode

Programming code: 6350# System not send prompt tone when all ringing Ext busy, this is default setting
6351# System send prompt tone when all ringing Ext busy

☞ If ringing extension is Ext group,when all busy, prompt tone is invalid
Programming code: 636#
Instruction: When all ringing Ext is busy, caller hear ring back tone(in waiting status)
Programming code: 636G#
Instruction: When all ringing Ext is busy,system ring idle extension in Ext.group G(01-32). When set G=00,means operator

5.16.4 Call center mode setting

Programming code:640G# Set Ext.group G as call center attendant group in day mode
641G# Set Ext.group G as call center attendant group in night mode

Instruction: G is Ext group number 01-32, in this mode when incoming call arrives, will ring the idle extension individually in this group.

5.16.5 Auto-attendant setting

Auto-attendant work mode, CRBT, also including alarm prompt, will all use the auto-attendant message. This system is built in up to 4 channel auto-attendant(**for TP240, it is 2 channel**), each channel can record the message in 60s(OGM), and each channel can record 6 section message, the first 4 section use as attendant greeting message, the fifth section use as alarm prompt message, the sixth section use as CO to CO transfer prompt message. Each Trunk line can be set for different channel OGM, and each channel OGM can be set for different operator.

5.16.5.1Enable/Disable auto-attendant

Programming code: 109# Enable all auto-attendant

109V_1..V_2# Batch setting enable some auto-attendant

(**notes**: for TP256, V=1-4, for TP240, V=1-2)

Default setting: all auto-attendant is enabled.

Case: Disable second channel auto-attendant,but enable first,third,fourth channel auto-attendant, in programming status, input 109 1 3 4 #

5.16.5.2 Auto-attendant setting in day/night mode

Programming code: 6510# Auto-attendant is enabled in both day and night mode, this is default setting

6511# Auto-attendant is enabled in day mode, but disabled in night mode

6512# Auto-attendant is enabled in night mode, but disabled in day mode

☞If day/night work mode is not enabled, then no need to use above code.

5.16.5.3 Auto-attendant corresponding to operator

When external incoming call arrives, if caller hear the first channel OGM, dial 0 for operator 1, if the caller hear the second channel OGM, dial 0 for operator 2

Programming code: 108# All auto-attendant corresponding to all operator, this is default setting

Instruction: When external incoming call arrives, no matter which channel OGM the caller heard, after dial 0, system will ring idle operator sequence from No.1-4 operator

Programming code: 108VK# Channel V OGM corresponding to operator K.

Instruction: V=1-4, K=1-4, when external incoming call arrives, when caller dial 0 after hear channel K OGM, system will ring only operator K.

5.16.5.4 The access of trunk use auto-attendant

Programming code: 602# Set all trunk can access all auto-attendant, this is default setting

602VM1M2*M3…M5# Batch setting trunk M1M2*M3…M5 can access
channel V auto-attendant
603# Prohibit all trunk access all auto-attendant.
603VM1M2*M3…M5# Batch setting prohibit trunk M1M2*M3…M5 can access channel V auto-attendant

5.16.5.5 OGM message section setting

Programming code: 650X# Set OGM in X section mode

Instruction: X=1-4, default setting is 3, system will play different message when external incoming call arrives in auto-attendant work mode:
When X=1, is one section mode, system only play one section greeting message for caller
When X=2, is two section mode, system will play two section greeting message(one is in day mode, one is in night mode) for caller
When X=3, is three section mode, system will play three section greeting message(the first section like “Welcome to call our company, please dial the desired Ext number or dial 0 for operator”, the second section like “Sorry, the extension you dialed is busy, please dial other Ext number or dial 0 for operator”, the third section like “Sorry, the extension you dialed no answering, please dial other Ext number or dial 0 for operator”)
When X=4, is four section mode, the first 3 mode is similar to three section mode, the fourth section is used in night mode.

5.16.5.6 OGM recordable time setting

On default setting, system is built in 4 channel auto-attendant(**for TP240, it is 2 channel**), the recordable time for each time is 60s, can be divided into 6 section. The default recordable time for each section is: 20s, 20s, 20s, 00s, 00s, 00s
Notes: the time is the maximum recordable time, initialization code 0000# will not change this setting.

Programming code: 1000# Initialize the recording time to default setting
100T1T2T3T4T5T6# Set the recording time for each section of all auto-attendant.
10VT1T2T3T4T5T6# Set the recording time for each section of No.V channel auto-attendant.

Instruction: T1、T2、T3、T4、T5、T6 is the recording time length, unit is second, 00-99, 00 means this section no use.

Case 1: Set OGM in one section, and enable alarm clock function(use the fifth section message), the first section is 45s, the fifth section is 15s.
In programming status, input 100 45 00 00 00 15 00#

Case 2: Set the recording time for 1-4 section in the second channel auto-attendant is 20s, 15s, 15s, 10s, in programming status, input 102 20 15 15 10 00 00 00#

5.16.5.7 OGM recording

There are three ways to record the OGM:
Through PC management software to record the message, details please see “PC

Management Software Instruction”
Prepare well the message file, and play it in a music player, connect this player with MUSIC port of system, download the message through programming extension.
Through programming extension record as per following steps
A- OGM recording by programming extension
Programming code: 110K# Record section K message
Instruction: record section K message for all 4 channel simultaneously
Programming code: 11VK# Record section K message for channel V auto-attendant
.Start recording after input programming code and hear a beep, finish recording after hear another beep
.Pay attention to the recording effect when record multiple channel simultaneously. If it will cause noisy or low volume, please record one by one
.If the message is shorter than the recorable time length, after finish recording, on hook directly.
B- Download the message file from music player
Prepare well the voice message file at first,connect music player with MUSIC port of system, turn on the player to play the voice message, in programming status, input 11VK9#, after hear a beep,the voice message will be started for downloading.
Notes :
1. V=1-4, means the channel of OGM, K=1-6, means the section of message
2. Only one section message can be recording each time
3. Set well the recordable time for each section before download

5.16.5.8 Monitor the recorded OGM

Programming code: 12VK# Monitor section K message in channel V OGM, not changing the OGM volume
12VKP# Monitor section K message in channel V OGM, and change the OGM volume to level P

Instruction: V=1-4, K=1-6, P=0-7 is the volume level, 0 is the maximum level, 7 is the minimum level

5.16.6 Auto-attendant work mode setting

5.16.6.1Auto-attendant busy process

Programming code: 6520# waiting status when auto-attendant busy, this is default setting
6521# transfer to operator when auto-attendant busy
Instruction: In the condition of multiple incoming call arrives, because auto-attendant is 4 channel maximum, some caller have to be waiting status(hear ring back tone no process) as auto-attendant busy. By above setting, system can transfer the waiting call to operator ringing extension, to avoid missing any call.

5.16.6.2 No dial process

Programming code: 654TT#
Instruction: TT is dialing time on waiting, TT=00-99, unit is second, default setting is

5s, after OGM finish playing, the time that system wait for dialing

Programming code: 6540# in auto-attendant mode, if caller doesn't dial within waiting time, the call will be disconnected, this is default setting
6541# in auto-attendant mode, if caller doesn't dial within waiting time, the call will be transferred to operator.

5.16.6.3 Incorrect dialing process

Programming code: 6550# System send prompt tone when incorrect dialing occur,and wait for redialing, this is default setting

Instruction: in auto-attendant work mode, if caller dial incorrect number, system will send continuous beep tone, and caller can dial other number.

Programming code:6551# No dial process when incorrect dialing occur

Instruction: in auto-attendant work mode,if caller dial incorrect number, system will process as per no dial.

5.16.6.4 Dialed Ext busy process

Programming code: 6522# No prompt tone when dialed extension is busy
6523# System send prompt tone when dialed extension is busy, this is default setting.

Instruction: when the dialed extension is on off hook call status, the user will hear three beep prompt tone.

Programming code: 656TT# Set the waiting processing time when dialed extension is busy, default value is 00

Instruction: TT = 00-99, unit is second. In auto-attendant work mode, when dialed extension is busy, the waiting time for next processing, during this time, caller will hear on hold music, when the dialed extension is free system will ring it again.

5.16.6.5 Ringing time setting

Programming code: 081TT#

Instruction: TT=00-99, unit is second. In auto-attendant work mode, when caller dial the extension, the maximum ringing time if no one answer. During this time, caller will hear on hold music.

5.16.6.6 Dialed extension no one answering process

In auto-attendant work mode, when dialed extension no one answering within the setting ringing time, firstly the extension will stop ringing, and system has following two process mode:

When auto-attendant is in three or four section mode, system send the third section message to caller, and caller can continue to dial.

When auto-attendant is in one or two section mode, system process as per below two mode:

Programming code: 6570# Release the call in dialed extension no one answering
6571# Process as per operator work mode if dialed extension on one answering

5.16.7 System CRBT relevant setting

- System CRBT(Color Ring Back Tone) mode:when external incoming call arrives,in auto-attendant mode,caller hear OGM, meanwhile system ring internal extension as operator mode or call center mode. This function is good for playing advertising message for caller.

CRBT mode notes:

- Auto-attendant should be setting and enabled if use CRBT mode.
- The corresponding operator work mode parameter(including operator ringing extension, ringing mode) or call center mode parameter should be setting to use CRBT mode.
- The playing message is the first section for CRBT,so one section OGM is preferred for best result.
- In CRBT mode, after playing the message, system will auto play on hold music.

5.16.7.1 CRBT processing mode

Programming code: 6530#

Instruction: caller hear the CRBT, meanwhile system ring operator extension directly

Programming code: 6531#

Instruction: caller hear CRBT at first, and system not ring operator extension, caller can make secondary dialing, if not, system will ring operator ext.

Programming code: 653TT# Set the allowable dialing time in CRBT mode

Instruction: TT=01-99, default setting TT=05, that is 5 seconds

5.16.7.2 CRBT ringing mode

Programming code: 6532#

Instruction: In CRBT mode, system process as per operator work mode when ring internal extension, this is default setting

Programming code: 6533#

Instruction: In CRBT mode, system process as per call center mode when ring internal extension

5.17 Speed dialing

Speed dialing, also called fixed dialing numbers(FDN), is one mode for dialing extension (or Ext group). For example, in auto-attendant mode, caller just dial one digit for calling certain extension.

5.17.1 Enable/Disable speed dialing

Programming code: 0501#

Instruction: Enable speed dialing function, no matter external dialing in auto-attendant mode or intercom dialing, caller can just dial one digit(0-9), system will ring the corresponding extension or Ext group.

Programming code: 0502#

Instruction: Enable speed dialing function, only for external dialing in auto-attendant mode, caller can just dial one digit(0-9), system will ring the corresponding extension or Ext group.

Programming code: 0500# Disable speed dialing function, this is default setting

5.17.2 Set the initial code for Ext/Ext group

Programming code: 51X# Set X is the initial code for Ext or Ext group.
051X1X2# Set X1 and X2 are the initial code for Ext or Ext group.

Instruction: X, X1,X2 is the digit among of 0-9, on default setting X1=6, X2=8

5.17.3 Set speed dialing number

Programming code: 052UN#

Instruction: Set digit U corresponding to Ext number N (N=001-128), U=0-9

Programming code: 053UG#

Instruction: Set digit U corresponding to Ext group number G, G=1-32

5.17.4 Clear speed dialing number

Programming code: 052# clear all speed dialing number. This is default setting

5.18 Call pickup

5.18.1 Call pickup level instruction

L=1, call pickup only for the hold call itself
L=2, call pickup for internal ringing extension
L=3, call pickup for external line.
L=4, not available at present
L=5, call pickup for general
On default setting, L=5

5.18.2 Call pickup level setting

Programming code: 34L# Set call pickup level L for all extension, initialized setting L = 5
34LN# Set call pickup level L for Ext.N
34LN$_1$N$_2$*N$_3$…N$_5$# Batch setting call pickup level L for Ext.N$_1$N$_2$*N$_3$…N$_5$

5.18.3 Call pickup operation

5.18.3.1 Call pickup for internal ringing Ext.

Ext Operation: Off hook + (*) #3 + ringing Ext number
Instruction: any non-ringing extension can pickup the ringing extension(both external and intercom call)

5.18.3.2 Call pickup for general

Ext operation: off hook + (*)#9
Instruction: any non-ringing extension can pickup all call.

5.19 Call transfer

5.19.1 Call transfer parameter setting

5.19.1.1 Flash time setting

Programming code: 150TT#
Instruction: TT=01-20, unit is 0.1s, default setting TT=10

5.19.1.2 Set outgoing call transfer delayed time

Programming code: 151TT#

Instruction: TT=01-99, unit is second. Default setting TT=05. For example, operator dial outgoing call number,then divert it to another Ext. After dialed the number, system will identify the operation is on hook if operator make call transfer operation(flash hook)immediately,to cause the call transfer failure, so operator need to wait some time (TT) to make the call transfer after dial the outgoing call number.

5.19.1.3 Set ringing time for call transfer

Programming code: 082TT
Instruction: TT=01-99, unit is second, this time is the ringing time for transfer call.

5.19.1.4 No answer process for call transfer

Programming code: 1530# Not ring back if transfer call no one answering, this is default setting
1531# Ring back if transfer call no one answering

5.19.1.5 Intercom call transfer

Programming code: 1540# Disable intercom call transfer
1541# Enable intercom call transfer, this is default setting

5.19.1.6 No dial delayed time setting for call transfer

Programming code: 155TT#

Instruction: TT=00-99, unit is second. When extension make call transfer, after flash hook, the time that system wait for dialing, during this time, transfer extension hear dial tone, and if no dial within this time, system process as per following two mode:

Programming code: 1550#

Instruction: transfer extension hear engaged tone(busy tone), the caller continue to hear hold music, till transfer extension flash hook to retrieve the call again.

Programming code: 1551#

Instruction: transfer extension auto retrieve the previous call, this is default setting

5.19.1.7Incorrect dialing process for call transfer

Programming code: 1560#

Instruction: system send three continuous beep tone and wait for redialing

Programming code: 1561#

Instruction: transfer extension can not redial, just hear continuous engaged tone

Programming code: 156TT#

Instruction: TT=01-99, unit is second, when transfer extension make incorrect dialing or the dialed ext is busy, the time for system send engaged tone

5.19.1.8 Retrieve priority after call transfer

Programming code: 1570# Transferred call can be retrieved by flash hook operation, this is default setting

1571# Transferred call can not be retrieved.

Instruction: After transfer the call to another extension, if the transfer extension hear ring back tone but not on hook, can flash hook to retrieve the call, at this moment another extension stop ringing.

5.19.1.9 Enable/Disable call transfer

Programming code: 210# Disable call transfer for all extension

210N_1N_2*N_3…N_5# Batch setting disable call transfer for Ext.N_1N_2*N_3…N_5

211# Enable call transfer for all extension, this is default setting

211N_1N_2*N_3…N_5# Batch setting enable call transfer for Ext.N_1N_2*N_3…N_5

5.19.2 Call transfer operation

5.19.2.1 Call transfer for external/intercom call

Ext Operation: Call transfer for external call: flash hook + Ext number

Call transfer for intercom call: flash hook + Ext number

5.19.2.2 Outgoing call transfer(boss/secretary function)

Ext Operation: Flash hook + Ext number

Instruction: Ext 6002 make an outgoing call and then transfer the call to Ext 6008, the operation step is: during conversation with external line, Ext 6002 flash hook, dial 6008 within 10 seconds, Ext.6002 can on hook after hear internal ring back tone(6008 start ringing). Ext.6008 off hook to talk with the external line.

5.20 Call forward

5.20.1 Call forward parameter setting

5.20.1.1 Call forward(no answer) time setting

Programming code: 083TT#

Instruction: TT = 01-99, unit is second, default setting TT=20. This time is the ringing time for the extension which is set call forward function, after this time, the extension will stop ringing, and the call will be forwarding to another extension.

Notes: this time should be less than intercom call ringing time(080TT#)and auto-attendant work mode ringing time(081TT#).

5.20.1.2Call forward setting memory protect while power off

Programming code: 0610# Disable memory protect while power off
0611# Enable memory protect while power off, this is default setting

5.20.1.3 Trunk group for call forward to trunk line

Programming code: 158S# Set the trunk group S as call forward to Trunk line
Instruction: S is the trunk group number, S=00-32, when S=00, means call forward is available for all Trunk line. Default setting S=00

5.20.1.4 Maximum times for call forward

Programming code: 159XX# Set the maximum number for call forward
Instruction: XX=01-16, it means the frequency that the call can be forwarded, call can be forwarded maximum 16 times. Default setting XX=08

5.20.1.5 Set call forward to trunk line by Ext

Programming code: 260# Prohibit call forward to Trunk line setting by all Ext
260N_1N_2*N_3…N_5# Batch setting prohibit call forward to Trunk line setting by Ext.N_1N_2*N_3…N_5
261# Allow call forward to Trunk line setting by all Ext
261N_1N_2*N_3…N_5# Batch setting allow call forward to Trunk line setting by Ext.N_1N_2*N_3…N_5

5.20.2 Call forward(always/busy/no answer)setting by operator

5.20.2.1 Clear the call forward setting for all extension

Operator operation: Off-hook + (*)#26#, on hook after hear beep
Or off-hook + (*)#27#, on hook after hear beep

5.20.2.2 Clear the call forward setting for certain extension

Operator operation: Off-hook + (*)#26N#, on hook after hear beep
Or off-hook + (*)#27N#, on hook after hear beep
Instruction: Clear call forward setting for Ext.N

5.20.2.3 Set certain Ext call forward(always) to certain Ext

Operator operation: off-hook + (*)#26N + Ext number, on hook after hear beep
Instruction: Set Ext.N incoming call forward to another extension

5.20.2.4 Set certain Ext call forward(always) to trunk line

Operator operation: off-hook + (*)#26N + Trunk line number

Instruction: Set Ext.N incoming call forward to another Trunk line

5.20.2.5 Set certain Ext call forward(busy/no answer)to certain extension

Operator operation: off-hook + (*)#27N + Ext number
Instruction: Set Ext.N call forward(when busy or no answer)to another extension

5.20.2.6 Set certain Ext call forward(busy/no answer) to trunk line

Operator operation: off-hook + (*) # 27N + Trunk line number
Instruction: Set Ext N call forward(when busy or no answer)to another Trunk line

5.20.2.7 Set call time for call forward to Trunk line

Operator operation: off-hook + (*)#28TT#

Instruction: Set call forward time as TT, TT=01-00, unit is 15s, default setting TT=10, that is 150s, among of it call time is 120s, and the rest 30s is the time for prompt tone.

Operator Operation: off-hook + (*)#28TT+ABCD $_1$+ABCD$_2$+…+ ABCD$_N$
Instruction: TT=01-99, unit is 15s. ABCD $_1$,ABCD$_2$,ABCD$_N$ are the Ext number to be setting.

5.20.3 Call forward(always/busy/no answer)setting by extension

5.20.3.1 Clear call forward setting for extension

Ext Operation: Off-hook + (*)# 81#
Off-hook + (*)# 82#
Instruction: This setting is to clear call forward(always/busy/no answer) for extension. It is preferred before setting call forward.

5.20.3.2 Set call forward(always) to another Ext

Ext Operation: Off-hook + (*)#81 + Ext number, on hook after hear beep tone
Instruction: Ext.6002 need to forward all incoming call(external and intercom call)to Ext.6008, then on 6002 input (*)#81 6008, after hear a beep tone, on hook.

5.20.3.3 Set call forward(always) to trunk line(CO line transfer to CO line)

Ext Operation: Off-hook + (*)#81 + * + Trunk line number, on hook after hear beep
Instruction: By this setting, all the incoming call to the setting Ext will be forwarding to another Trunk line automatically, and the setting Ext will not ring. The maximum digit for Trunk line number is 30 digit, end up with # or on hook.

5.20.3.4 Set call forward(busy/no answer) to internal Ext

Ext Operation: Off-hook + (*)#82 + Ext number, on hook after hear beep tone
Instruction: By this setting, when Ext is busy or no answer(over 20s, default setting), the call will be forwarding to another Ext.

5.20.3.5 Set call forward(busy/no answer)to trunk line(Trunk line transfer to Trunk line)

Ext Operation: Off-hook + (*)#82 + * + Trunk line number, on hook after hear beep tone

Instruction: By this setting, when Ext is busy or no answer(over 20s, default setting), the call will be forwarding to another Trunk line automatically

5.21 Trunk line reservation

5.21.1 Reservation time setting

Programming code : 084TT#

Instruction :TT=01-99 , unit =10s . Reserving the Trunk line , then extension can do another operation .

Default setting: TT=18 , that means reservation time is 180s .

5.21.2 How to reserve trunk line

Ext Operation : during the conversation + flash the hook+##

5.21.3 Restore the reserved trunk line

Ext operation : during the conversation + flash hook + ##

Instruction : During the conversation , flash the hook (or pres flash button)+## to reserve the call . In that time , caller will hear call waiting music .During the reservation , the operator call do any operation , like call transfer , call pick up , internal call etc . If want to restore , input (*)9 .

5.21.4 Call pickup during reservation

Operator operation : During the conversation + flash the hook + #9

5.22 Conference call

5.22.1 Three way conference

Ext operation : During intercom conversation + flash the hook + * + Ext. number

5.22.2 Three way conference (1 Trunk line and 2 Extensions)

Ext operation : During the conversation + flash the hook + * + Ext. number

5.22.3 Three way conference (2 Trunk lines and 1 Extension)

Ext. operation : During the reservation of the first call and talking with second call + flash the hook + #6

Instruction : Firstly , when Ext. A talk with Trunk line B , Ext. A flash the hook and input

to reserve it . Then Ext. A dial 9 to make outgoing call from Trunk line C . During the conversation with Trunk line C and Ext.A flash the hook and input #6 , now Ext.A , Trunk line B and Trunk line C can make three way conference .When Ext. A on hook , the conversation will be ended .

5.22.4 Multi-way conference

5.22.5 Conference time Setting

Programming code : 086TT#

Instruction ： TT=01-99 , unit =15s .

Default setting: TT=12 , that means conference time is 180s .

5.23 Call barge-in/Force disconnect

Operator operation : Off hook + (*)# + 71 +M

Instruction : Monitoring the conversation from Trunk line M . M= Trunk line, 01-32

Operator operation : Off hook +(*)# + 72 + Ext. number

Instruction : Monitoring the conversation from certain extension

Force disconnect: after call barge-in successfully, operator can input # to force disconnect it .

Notes: this function is only valid for programming extension .

5.24 Call all extension(emergency call)

Operator operation : Off hook +(*)# 88
Instruction : by this operation, all extension will ring simultaneously and can talk each other when off hook .
Notes: this function is only for programming extension .

5.25 Common Ext operation

5.25.1 DND(Do Not Disturb)

Ext. Operation : Off hook +(*)# 83#
Notes: Cancel it when off hook this extension.
Instruction: After set this function,it will not ring when any call calls in .

5.25.2 Clear extension function setting

Ext. operation : Off hook +(*)#80#
Instruction : After set it , the below function will clear .

5.25.3 Call switch

When extension talk with trunk line A . At the same time , there have another caller calls in from trunk line A . Then extension will hear the prompt tone .Then the extension can reserve the conversation and pick up the another call .
Ext. operation : during the conversation + flash the hook + #8
Instruction : Doing this setting , it should flash the hook (that means press flash button) . It can set the flash time in the programming extension .

5.25.4 Flash time setting

Programming code : 152TT#
Instruction : TT=0.1s , 01-99 . Default TT=05

5.26 Internal hotline function

5.26.1 Enable/Disable extension hot line function

Programming code : 220# Enable extension hot line function for all extension .
220 $N_1N_2*N_3…N_5$# Batch setting enable extension hot line function for some extension $N_1N_2*N_3…N_5$
221 # Disable extension hot line function for all extension
221 $N_1N_2*N_3…N_5$# Batch setting disable extension hot line function for some extension $N_1N_2*N_3…N_5$

5.26.2 Hotline waiting time setting

Programming code : 085TT#
Instruction : TT=hot line waiting time . Unit =0.1s ,00-99 . (allow dial number)
Default setting:TT=10.That means 1s.Disable hot line function for all extension.
Case: Set Ext.6019-6088 internal hotline function. In programming status, input 08500# 220 019*088#

5.27 Special prefix setting (compulsory for IP prefix dialing and LCR)

That means the system can select the Trunk line to make outgoing call according to the special number .In IP prefix dialing, it will add the IP prefix digit to the outside number according to the special number.

Programming code : 5200# Clear all special prefix

I**nstruction:** we suggest use this code to clear all other content before setting prefix number.

Programming code : 52Y# Clear No.Y group special prefix

Instruction : Y=1-4

Programming code : 52YPP# Clear item PP special number in group Y
52YPPabcd# Set special prefix abcd to item PP in group Y .

Instruction: PP is prefix group number, 01-16, each item has 16 group, abcd is special prefix, no limit on digit, 1-8 digit is ok, end up with # if no enough 8 digit. And each digit can be 0-9, but *, # are not ok.

Default setting: no setting.

5.28 LCR(Least Cost Routing) function

Manual LCR : when the extension dial out, the system will select the least-cost routing according to the outgoing access-code.

Auto LCR : When the user dial out, the system will select the least-cost routing according to the routing numbers which is set in the system.(no need to dial any special access-code, the system will select routing intelligently).

5.28.1 Trunk group setting

The trunk(Trunk line)can be divided into five group (two class).One common Trunk line group and four special Trunk line group

Programming code: 51Y# Set all Trunk line in No.Y group

51YM_1M_2*M_3…M_5# Batching setting some Trunk line M_1M_2*M_3…M_5 in No.Y group

Instruction : When Y=0, means common Trunk line group . When Y=1-4, means special Trunk line group .

$M_1M_2M_3$…M_5=Trunk line port , M=01-32

Default setting: all Trunk line is common Trunk line group

5.28.2 LCR parameter setting

Programming code : 5010# Disable LCR function (default setting)

5011# Enable auto LCR function and disable manual LCR

5012# Enable manual LCR function and disable auto LCR

5013# Enable manual LCR function and auto LCR

5020# Allow use common trunk line group when special trunk line busy(default setting)

5021# Don't allow use common trunk line group when special trunk line busy

5030# Allow use special trunk line group when common trunk line group busy

5031# Don't allow use special trunk line group when common trunk line group busy

5.28.3 Call restriction (only for LCR function)

Programming code : 604# All allow trunk line dial out

604 M_1M_2*M_3…M_5# Batch setting allow some Trunk line M_1M_2*M_3…M_5 dial out

605# Prohibit all Trunk line dial out

605 M_1M_2*M_3…M_5# Batch setting prohibit some Trunk line M_1M_2*M_3…M_5 dial out

5.28.4 Access code setting for special trunk line group (only for auto LCR)

Programming code : 003X# (default X=7)

Instruction : X=0-9 .

5.29 IP prefix dialing setting

5.29.1 IP prefix setting

Programming code : 5410# Set prefix number can include * ,#
5411# Set prefix number can't include *,#
5412# Set prefix number * as pause symbol, interval time] is 0.5s.

If setting 5410# ,it should be set the IP prefix as below programming .

Programming code : 550abcdef + off hook setting normal IP prefix
55Yabcdef + off hook setting special IP prefix in group Y

Instruction : All code should be set in programming status .

abcdef= IP prefix number ,1-30 digits .Y=1-4 , that means the IP prefix group

Y=1-4 ,IP group number

Programming code : 550abcdef + off hook , setting normal IP prefix
55Yabcdef + off hook, setting special IP prefix in group Y

Clear IP number

Programming code : 55# , clear all IP prefix
55Y# , clear IP prefix in group Y . Y=0-5 , Y=0 normal IP number

5.29.2 Enable/Disable IP prefix dialing

Programming code : 5400# disable IP prefix dialing (default setting)
5401# enable IP prefix dialing

Programming code : 230# enable IP prefix dialing function for all extension
230 $N_1N_2*N_3…N_5$# batch setting enable IP prefix dialing function for some extension $N_1N_2*N_3…N_5$
231 # disable IP prefix dialing function for all extension
231 $N_1N_2*N_3…N_5$# batch setting disable P dialing function for some extension $N_1N_2*N_3…N_5$

Default setting : Disable system IP prefix dialing function.

5.29.3 IP IP prefix dialing rule setting

Rule 1 : Added corresponding IP prefix according to the called outside number

Programming code : 5402# Added corresponding IP prefix according to the called outside number (default setting)
5420# Don't allow add IP prefix when dialing normal number
5421# Allow add IP prefix when dialing normal number

Rule 2 : Added corresponding IP number according to selected Trunk line .

Programming code : 5403# Added corresponding IP number according to selected Trunk line .
5420# Don't add IP number if using common Trunk line
5421# Added IP prefix number if using normal Trunk line

5.30 Memory dialing

Maximum can set 96 groups and 30 digit memory number .

5.30.1 Memory number setting

Refer to IP prefix setting ,if system has set 5410# , that means the number can be with *,# . Please set it as below programming .
Programming code :43Kabcdef + off hook . (setting No. K group memory number . It can be with *,#)

If system has set 5411# , that means the number can't be with *,# . Please set it as below programming .
Programming code :43Kabcdef# (setting No.K group memory number .It can not contain *,#)
Instruction : K that means group number,01-96. abcdef that means the Trunk line number. 1-30 digits no limit, end up with # or on hook
Programming code : 43# clear all memory number
43K# clear No. K group memory number

5.30.2 Enable/Disable memory dialing

Programming code :250# Disable memory dialing for all Ext
250 $N_1N_2*N_3…N_5$# Batch setting memory dialing for some Ext $N_1N_2*N_3…N_5$
251# Enable memory dialing for all Ext
251 $N_1N_2*N_3…N_5$# Batch setting disable memory dialing for some Ext.$N_1N_2*N_3…N_5$
Default: enable memory dialing for all extension $N_1N_2*N_3…N_5$

5.30.3 How to use memory dialing

Ext operation : Off hook + (*)#70+K
Instruction : In direct dial out mode , it should be input * first ; K is the group number , 01-96 .
Case: No. 8 group memory number is 13302818996 . In Ext. 6001 , on hook + 43 08 13302818996+# +251# . That means Ext.6001 input *#70 08 , it will call the outside number 13302818996 automatically .

5.31 Private password

5.31.1 Setting private password

Programming code : 45# Clear all private password
45U# Clear No. U private password U=001-128

45ULWWW# Clear No. U private password and set to class L

Instruction : U=three digit password account , 001-128 . L= Extension Class ,0-9 . WWWW=four digit password

5.31.2 How to use private password

The password should be assigned by programming extension to another extension user . The password control the Trunk line access and class .

Programming code : off hook +(*)*5+U+WWWW +9+ outside number .

Instruction : Password U + WWWW , total 7 digit

case : The Classic of Ext. 6006 is L , only can make intercom call . The user 005 password is 9530 and class L is 1 .

Then the user 005 can on hook Ext. 6001 , input *#+005 9530 +9 + outside number .

5.32 Extension dynamic lock

5.32.1 Enable/Disable extension dynamic lock

Programming code : 0690#

Instruction : Disable Extension dynamic lock

Programming code : 0691#

Instruction : Enable Extension dynamic lock. It is default value .

5.32.2 Set extension dynamic lock

Programming code: 290# Set dynamic lock for all extension
290N_1N_2*N_3…N_5# Batch setting dynamic lock for some extensions N_1N_2*N_3…N_5
291# Disable dynamic lock for all extensions
290N_1N_2*N_3…N_5# Batch setting disable dynamic lock for some extensions N_1N_2*N_3…N_5

Default setting: disable dynamic lock for all extension

5.32.3 Clear dynamic lock by operator

Operator operation: off hook + (*)#05#

Instruction: clear dynamic lock for all extension

Operator operation: off hook + (*） #05+ABCD $_1$+ABCD$_2$+…+ ABCD$_N$ Clear some extension dynamic lock .

Instruction :Setting some extension dynamic lock as 0000

5.32.4 Change dynamic lock by extension

Ext Operation: off hook + (*)#5*abcd$_1$ + abcd$_2$ #

Instruction : abcd$_1$ = old password abcd$_2$ = new password

5.32.5 How to use dynamic lock

How to Lock

Ext Operation: off hook +(*)#5 * bacd #

How to Unlock
Ext Operation: off hook +(*)#5# abcd #
Instruction : abcd is the extension dynamic lock. If forget, it can be cleared by operator

5.33 Alarm clock

5.33.1 Alarm clock message setting

The fifth section OGM message can be used as the alarm prompt message . Before using this function , please setting the message

Programming code : 1300# Disable alarm message reminder
1301# Enable alarm message reminder and use the fifth section OGM as alarm message
131# Allow using all OGM as alarm message
131V_1..V_2 Batch setting alarm message can use OGM

Default : All using all GOM as alarm message

5.33.2 Set alarm clock by operator

Operator Operation: off hook + (*)#03HHTT++ABCD $_1$+ABCD$_2$+…+ ABCD$_N$
Instruction : HH: hour, 00-23 ; TT:minute , 00-59 ;ABCD $_1$,ABCD$_2$,ABCD$_N$: extension number

5.33.3 Clear alarm by operator

Operator operation : off hook +(*)#04# Clear all extension alarm
off hook +(*)# ABCD $_1$+ABCD$_2$+…+ ABCD$_N$ Clear alarm for extension ABCD $_1$,ABCD$_2$,ABCD$_N$

5.33.4 Set alarm clock by extension

Ext Operation: Off hook + (*)#4 HHTT# Set the time of alarm clock as HHTT
Off hook + (*)#4# clear alarm clock

5.34 Paging function

5.34.1 Page directly

Operator Operation: off hook + (*) *86#
Instruction : This function only for programming extension or operator .

5.34.2 Trunk line incoming call transfer to page

Ext Operation : During the conversation + flash the hook +#5
Instruction : When extension transfer the conversation to page ,the main extension can’t on hook until finish it .

5.35 Fax detect

5.35.1 Fax detect setting

Programming code : 1600# enable fax detected function
1601# disable fax detected function . It is default value .

Programming code : 161N#

Instruction : Enable fax detected function and setting Ext. N as the fax extension .

Instruction: set the number of signal that system detect fax, that is after system detect No.K signal,will distinguish it as fax.K=1-9 , default K=2

5.36 CLI(Caller ID)

5.36.1 Caller ID received mode

Programming code : 1812# FSK mode
1813# DTMF mode
1814# Auto detected (default value)
1815# Always FSK and DTMF mode

Instruction : This system can auto detected the receiving mode . No need to set manually . But it can force setting in some case .

Programming code : 1816# Enable FSK mode for 5s then disable automatically
1817# Always FSK mode
181TT# Setting receiving time .

Instruction : TT=01-99 , unit 0.1s .Default value is 1 . That means when outside calls , it start to receive .

5.36.2 Add prefix number for intercom Caller ID

Programming code: 1 8 0 # , Disable add prefix number for intercom Caller ID, this is default setting .

Programming code: 1 8 0 kk #

Instruction: Add prefix kk in intercom Caller ID number

5.36.3 Enable / Disable Intercom Caller ID

Programming code : 270# Disable intercom caller ID for all extensions
270 N1N2*N3…N5# Batch setting disable intercom caller ID for extension $N_1N_2*N_3…N_5$
271# Enable intercom caller ID for all extension
271 $N_1N_2*N_3…N_5$# Batch setting enable intercom caller ID for extension $N_1N_2*N_3…N_5$

5.37 Intercom function (Doorphone management)

5.37.1 Intercom function Setting

Programming code : 830#
Instruction : Disable intercom function. It is default value .
Programming code : 831#
I**nstruction :** Enable intercom function
Programming code : 40Y# Default : Y=0
Instruction : Y=0 , ringback tone is on hold music . Y=2 ring back tone is system ring back music . Y=2 mute
Programming code : 841Y# Default : Y=0
Instruction : Y=0 , system will ring the intercom extension to cut off . Y=1 , system will send DTMF code to cut off .
Programming code : 842K+off hook Default : Y=*
Instruction : Setting cut off code for intercom extension ; K= 2 digit .
Programming code : 843TT#
Instruction : Setting waiting dialing time for intercom extension . TT=01-99 , unit 0.1s . Default is 1
Programming code: Set the pick-up time for door lock interface, TT=01-99, unit is 0.1s, default setting is 5
Programming code : 845TT#
Instruction : Setting conversation time for the intercom extension . It will cut off over time . TT=01-99s .Default is 60s
Programming code : 846TT#
Instruction : Setting transfer time for intercom extension . TT=01-99s . Default is 20s

5.37.2 Setting intercom extension

Programming code : 280# Setting all extension is intercom extension
280 N_1N_2*N_3…N_5# Batch setting intercom extension for N_1N_2*N_3…N_5
281 # Setting all extension is normal extension
281 N_1N_2*N_3…N_5# Batch setting normal extension for N_1N_2*N_3…N_5

5.37.3 Setting door phone

Programming code : 8000# Cancel all door phone setting
80XN# Setting Ext.N for No.K door phone
Instruction : X = door phone number,1-4 . N= Ext. port ,001-255

☞For TP256, X=1-4, for TP240,X=1-2

5.37.4 Setting intercom extension / Ringing extension for door phone

Programming code : 81G# Setting all door phone ring Ext. group G in day (0=operator)
81XG# Setting No.X door phone ring Ext. group G in day.
82G# Setting all door phone ring Ext. group G in night

82XG Setting No.X door phone ring Ext. group G in night

☞For TP256, X=1-4, for TP240,X=1-2

5.37.5 How to use intercom and door phone

Method : Ringing corresponding extension after on off the phone . The one of ringing extension answer it and another will stop ringing .

5.37.6 How to use door lock

The extension can input *0 to open the corresponding door lock during the conversation .
The extension input *K to open No.K door lock , k=1-4

☞For TP256, k=1-4, for TP240,k=1-2

5.37.7 Unlock directly

Ext operation : off hook +(*)+#79K

Instruction :K=1-4 , door lock number

☞For TP256, k=1-4, for TP240,k=1-2

5.37.8 Door lock control special operation

Ext operation : Off hook +(*) + #77K Close No.K lock relay
Off hook +(*) + #78K Open No.K lock relay

5.38 PC Management billing function

5.38.1 System parameter

Programming code : 4000# Clear billing data
Programming code : 4100# Starting charging when outside calls in
4101# Not charging when outside calls in
402TT# Delay charging time setting . Default is 5s

5.38.2 Charging method setting

Programming code: 420# Setting reverse charging mode for all Trunk line
421# Setting delay charging mode for all Trunk line. It is default value .
Programming code : 420M_1M_2*M_3…M_5# Batch setting reverse charging mode for Trunk line M_1M_2*M_3…M_5
421 M_1M_2*M_3…M_5# Batch setting delay charging mode for Trunk line M_1M_2*M_3…M_5
Instruction :M_1，M_2，M_3，M_5=CO port ,01-32 .

5.39 Setting Office Code/Functional Code

5.39.1 Setting Office Code to * , Functional Code to

Programming code : 0010# (default setting)
Instruction : After setting this ,if setting the system in direct dialing-out mode and want to make internal call , the extension should be added * + extension number.
Also if setting system in indirect dialing-out mode , the functional code is # (like call pick up code is #9)

5.39.2 Setting Office Code to # , Functional Code to *

Programming code : 0011#
Instruction : After setting this ,if setting the system in direct dialing-out mode and want to make internal call , the extension should be added # + extension number.
Also if setting system in indirect dialing-out mode , the functional code is * (like call pick up code is *9)