6M38K2

6in Mid Frequency Speaker

Features

- 1.5in Voicecoil
- Die Cast Aluminium Basket



Specifications	
Nominal Diameter	160mm (6in)
Nominal Power (AES)[1]	100W
Program Power[2]	200W
Sensitivity (1W/1m)[3]	97dB
Voice Coil Diameter	38mm (1.5in)
Magnet Material	Neodynium
Nominal Impedance	8Ω
Frequency Range	169 - 9000Hz

Thiele & Small Parameters	
Fs	169Hz
Qes	0.53
Qts	0.50
Qms	7.8
Re	5.6Ω
Sd	132cm^2
Vas	2.6L
BL	9.5Tm
Mms	8.3g
Cms	0.1mm/N
Le (1kHz)	0.19mH
Xmax (lin.)[4]	±1.5mm

Mounting Information	
Overall Diameter	186mm
Mounting Holes Diameter	4 - 5.6mm
Bolt Circle Diameter	172mm
Baffle Cutout	147mm
Overall Depth	78mm
Net Weight	1.3kg

Notes: 1 2 hours test with pink noise (6dB crest) between Fs and 10Fs. Power calculated on rated minimum impedance.
2 Program Power is defined as 3dB greater than the AES Power
3 RMS Voltage set to 2.83V at nominal impedance
4 Xmax is defined as (Hc - Hg)/2

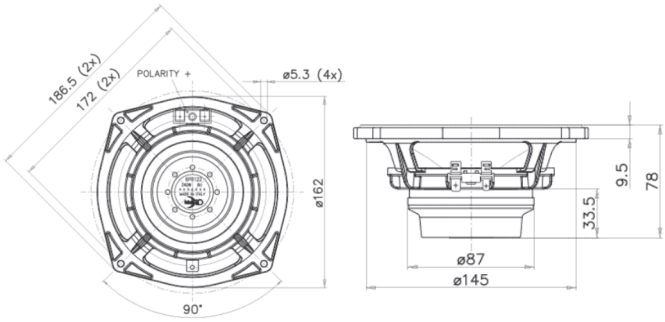

Frequency response measured with quasi-infinite baffle

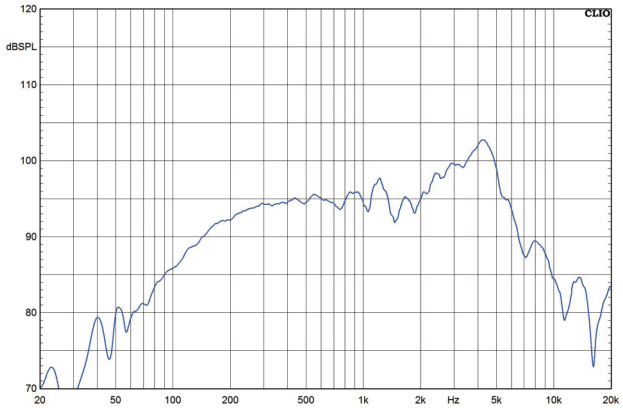

Impedance for 8Ω driver

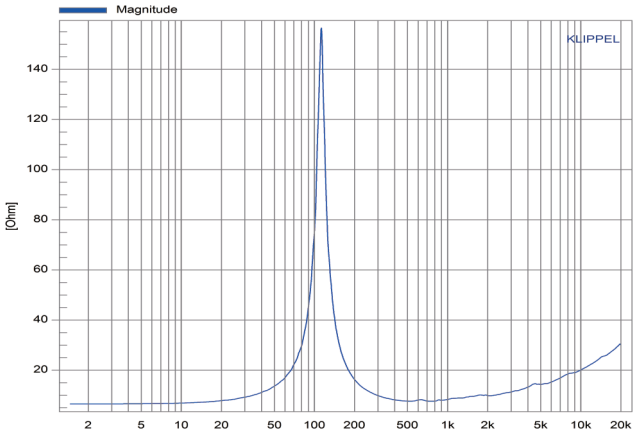

SUB	LOW	**MID**	HIGH	COAX	HORN