GooLED

GooLED-CRE-7830 Pin Fin Heat Sink Φ78mm for Cree

Features VS Benefits

* The GooLED-CRE-7830 Cree Pin Fin LED Heat Sinks are specifically designed for luminaires using the Cree LED engines.
* Mechanical compatibility with direct mounting of the LED engines to the LED cooler and thermal performance matching the lumen packages.
* For spotlight and downlight designs from 1,000 to 2,700 lumen.
* Thermal resistance range Rth 3.03°C/W.
* Modular design with mounting holes foreseen for direct mounting of Cree® XLamp® COB series.
* Diameter 78mm - standard height 30mm, Other heights on request.
* Forged from highly conductive aluminum.

Zhaga LED engine and radiator assembly is a unified future international standardization

* Below you find an overview of Cree COB's and LED modules which standard fit on the Pin Fin LED Heat Sinks.
* In this way mechanical after work and related costs can be avoided, and lighting designers can standardize their designs on a limited number of LED Pin Fin LED Heat Sink.

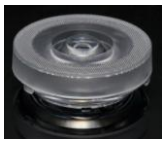

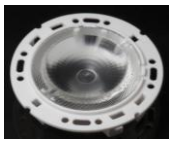

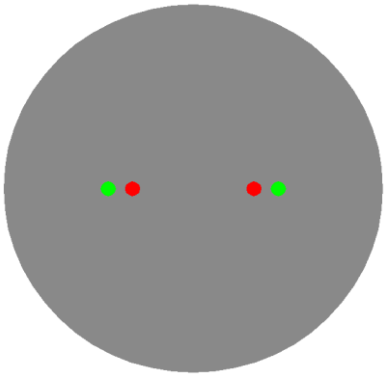

Cree LED Modules directly Mounting Options

Cree® XLamp® COB Series:

Xlamp CXA 25xx;
Xlamp CXB 25xx;

With the Zhaga Book 3 holders for the green indicator marks.
IDEAL Holder:50-2102CR;
BJB Holder:47.319.2141.50;
AAG.STUCCHI holder:8401-G2;
Direct mounting with machine screws M3x6.5mm.

With the LEDiL products:
Olivia series: FN14637-S; FN14828-M;
Ronda series: FN15xxx-xx;

Cree® XLamp® COB Series:

Xlamp CXA 18xx;
Xlamp CXB 18xx;

With the Zhaga Book 3 holders for the green indicator marks.
IDEAL Holder:50-2101CR;
BJB Holder:47.319.2131.50;
Direct mounting with machine screws M3x6.5mm.

With the LEDiL products:
Olivia series: FN14637-S; FN14828-M;
Ronda series: FN15xxx-xx;

Cree® XLamp® COB Series:

Xlamp CXA 15xx;
Xlamp CXB 15xx;

With the Zhaga Book 11 holders for the red indicator marks.
IDEAL Holder:50-2001CR;
BJB Holder:47.319.6104.50;
AAG.STUCCHI holder:8400-G2;
Direct mounting with machine screws M3x6.5mm.

With the LEDiL products:
Ronda series: FN15xxx-xx;

Tel:+86-769-39023131
Fax:+86-(020)28819702 ext:22122
Email:sales@mingfatech.com
Http://www.heatsinkled.com
Http://www.mingfatech.com

GooLED

GooLED-CRE-7830 Pin Fin Heat Sink Φ78mm for Cree

Mounting Options and Drawings & Dimensions

Example:GooLED-CRE-7830-B-1,2

Example:GooLED-CRE-78 1 - 2 - 3

1 Height (mm)

2 Anodising Color

B-Black

C-Clear

Z-Custom

3 Mounting Options - see graphics for details Combinations available

Ex.order code - 12

means option 1 and 2 combined

Notes:

- Mentioned models are an extraction of full product range.
- For specific mechanical adaptations please contact MingfaTech.
- MingfaTech reserves the right to change products or specifications without prior notice.

MOUNTING OPTION	Module type	Holder NO.	LEDiL products		THREAD	THREAD DEPTH	THREAD HOLE DISTANCE
			Olivia series	Ronda series			
1	Xlamp CXA 15xx; Xlamp CXB 15xx;	BJB Holder 47.319.6104.50	/	FN15xxx-xx;	M3	6.5mm	25.0mm/ 2-@180° (Zhaga Book 11)
		AAG.STUCCHI 8400-G2					
		IDEAL Holder 50-2001CR					
2	Xlamp CXA 18xx; Xlamp CXB 18xx;	BJB Holder 47.319.2131.50	FN14637-S; FN14828-M;		M3	6.5mm	35.0mm/ 2-@180° (Zhaga Book 3)
		IDEAL Holder 50-2101CR					
	Xlamp CXA 25xx; Xlamp CXB 25xx;	BJB Holder 47.319.2141.50					
		AAG.STUCCHI 8401-G2					
		IDEAL Holder 50-2102CR					

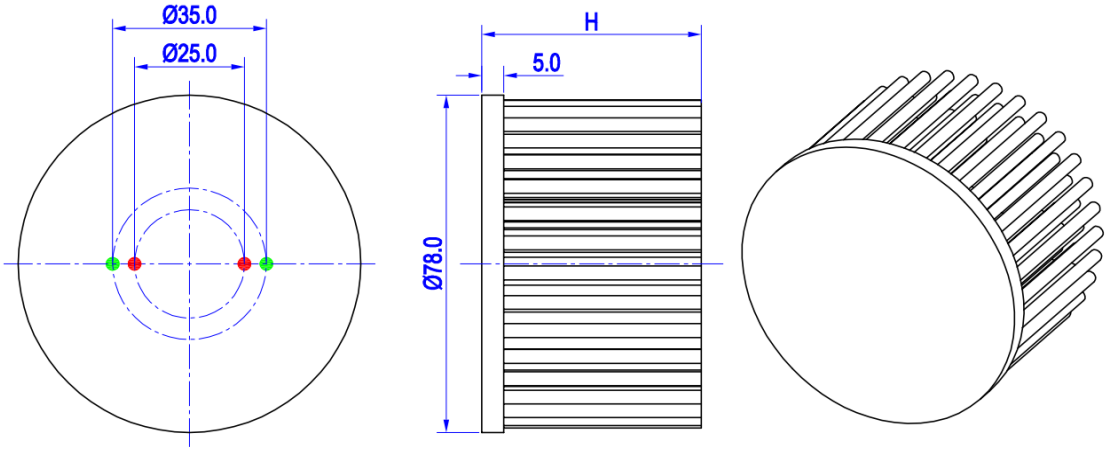

Tel:+86-769-39023131
Fax:+86-(020)28819702 ext:22122
Email:sales@mingfatech.com
Http://www.heatsinkled.com
Http://www.mingfatech.com

GooLED

GooLED-CRE-7830 Pin Fin Heat Sink Φ78mm for Cree

The product deta table

Model No.	GooLED-CRE-7830
Heatsink Size	Φ78xH30mm
Heatsink Material	AL1070
Finish	Black Anodized
Weight (g)	138.0
Dissipated power (Ths-amb,50℃)	16.5 (W)
Cooling surface area (mm^2)	46643
Thermal Resistance (Rhs-amb)	3.03 (°C/W)

The thermal data table

* Please be aware the dissipated power Pd is not the same as the electrical power Pe of a LED module.

*To calculate the dissipated power please use the following formula: Pd = Pe x (1-ηL).

Pd - Dissipated power ; Pe - Electrical power ; ηL = Light effciency of the LED module;

Pd = Pe x (1-ηL)		Heat sink to ambient thermal resistance Rhs-amb (°C/W)	Heat sink to ambient temperature rise Ths-amb (°C)
		GooLED-CRE-7830	
Dissipated Power Pd(W)	5.0	4.80	24.0
	10.0	3.60	36.0
	15.0	3.13	47.0
	20.0	2.95	59.0
	25.0	2.72	68.0

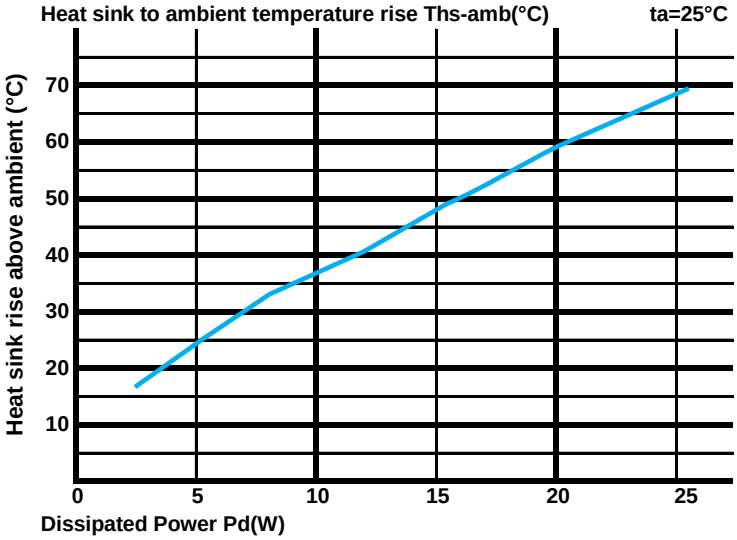

*The aluminum substrate side of the package outer shell is thermally connected to the heat sink via TIM (Thermal interface material).

MingFa recommends the use of a high thermal conductive interface between the LED module and the LED cooler.

Either thermal grease,A thermal pad or a phase change thermal pad thickness 0.1-0.15mm is recommended.

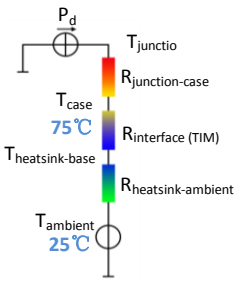

*Thermal resistance is a heat property and a measurement of a temperature difference by which an object or material resists a heat flow. Geometric shapes are different, the thermal resistance is different. Formula: θ =(Ths−Ta)/Pd

θ - Thermal Resistance [°C/W] ; Ths - Heatsink temperature ; Ta - Ambient temperature ;

*The thermal resistance between the junction section of the light-emitting diode and the aluminum substrate side of the package outer shell is $R_{junction\text{-}case}$, the thermal resistance of the TIM outside the package is $R_{interface\ (TIM)}$ [°C/W], the thermal resistance with the heat sink is $R_{heatsink\text{-}ambient}$ [°C/W], and the ambient temperature is $T_{ambient}$ [°C].

*Thermal resistances outside the package $R_{interface\ (TIM)}$ and $R_{heatsink\text{-}ambient}$ can be integrated into the thermal resistance $R_{case\text{-}ambient}$ at this point.Thus, the following formula is also used:

$T_{junction}=(R_{junction\text{-}case}+R_{case\text{-}ambient})\cdot Pd+T_{ambient}$

Tel:+86-769-39023131
Fax:+86-(020)28819702 ext:22122
Email:sales@mingfatech.com
Http://www.heatsinkled.com
Http://www.mingfatech.com